Test Report issued under the responsibility of:

TEST REPORT
IEC TR 62778
Application of IEC 62471 for the assessment of blue light hazard to light sources and luminaires

Report Number.....:	6125458.50P
Date of issue.....:	2022-02-09
Total number of pages	42
Name of Testing Laboratory preparing the Report.....:	DEKRA Testing and Certification (Shanghai) Ltd. 3/F, #250, Jiangchangsan Road building 16 Headquater Economy Park Shibei Hi-Tech Park, Jing'an District, Shanghai, P.R.C 200436
Applicant's name.....:	Lumileds Malaysia Sdn. Bhd
Address .....:	No. 3 , Lintang Bayan Lepas 8, Phase 4, Bayan Lepas Industrial Park, 11900 Penang, Malaysia
Test specification:	
Standard .....:	EN 62471: 2008 IEC TR 62778:2014 (Second Edition)
Test procedure .....:	CB Scheme
Non-standard test method .....:	N/A
Test Report Form No.....:	IEC62778A
Test Report Form(s) Originator ....:	TÜV SÜD Product Service GmbH
Master TRF .....:	Dated 2016-02

If this Test Report Form is used by non-IECEE members, the IECEE/IEC logo and the reference to the CB Scheme procedure shall be removed.

This report is not valid as a CB Test Report unless signed by an approved CB Testing Laboratory and appended to a CB Test Certificate issued by an NCB in accordance with IECEE 02.

General disclaimer:

The test results presented in this report relate only to the object tested.
This report shall not be reproduced, except in full, without the written approval of the Issuing CB Testing Laboratory. The authenticity of this Test Report and its contents can be verified by contacting the NCB, responsible for this Test Report.

The purpose of this report is only for export activities.

Test item description..... :	LED Package
Trade Mark..... :	LUMILEDS
Manufacturer..... :	Lumileds Malaysia Sdn. Bhd. No. 3 , Lintang Bayan Lepas 8, Phase 4, Bayan Lepas Industrial Park, 11900 Penang, Malaysia
Model/Type reference..... :	L1HZ-xxyy1zzzzzzzz; **L1HZ – aaaa1zzzzzzzz**; L1HZ-xxyy2zzzzzzzz (For details see Model list)
Ratings..... :	Max current 2000mA

Responsible Testing Laboratory (as applicable), testing procedure and testing location(s):			
☒	**CB Testing Laboratory:**	DEKRA Testing and Certification (Shanghai) Ltd.	
Testing location/ address.....		3/F, #250, Jiangchangsan Road building 16 Headquater Economy Park Shibei Hi-Tech Park, Jing'an District, Shanghai, P.R.C 200436	
☐	~~Associated CB Testing Laboratory:~~		
~~Testing location/ address.....~~			
Tested by (name, function, signature).....		Nancy Wang	Nancy Wang
Approved by (name, function, signature).....		Hanson Zhang	Hanson
☐	~~Testing procedure: CTF Stage 1:~~		
~~Testing location/ address.....~~			
~~Tested by (name, function, signature).~~			
~~Approved by (name, function, signature).....~~			
☐	~~Testing procedure: CTF Stage 2:~~		
~~Testing location/ address.....~~			
~~Tested by (name + signature).....~~			
~~Witnessed by (name, function, signature).....~~			
~~Approved by (name, function, signature).....~~			
☐	~~Testing procedure: CTF Stage 3:~~		

☐	~~Testing procedure: CTF Stage 4:~~		
~~Testing location/ address~~			
~~Tested by (name, function, signature)~~ .			
~~Witnessed by (name, function, signature)~~			
~~Approved by (name, function, signature)~~			
~~Supervised by (name, function, signature)~~			

List of Attachments (including a total number of pages in each attachment):

- Appendix 1: Photo Documentation
- Appendix 2: Model List
- Appendix 3: Relative Spectrum Of Tested Sample(s)
- Appendix 4: Table 6.1 Based On IEC 62471:2006
- Appendix 5: Table 6.1 Based On EN62471:2008, Attachment To IEC 62471 European Group Differences And National Differences

Summary of testing:

Tests performed (name of test and test clause):	**Testing location:**
These tests fulfil the requirements of standard ISO/IEC 17025. When determining the test conclusion, the Measurement Uncertainty of test has been considered. The tested sample of L1HZ-3070200000000 (1000mA) L1HZ-5070200000000 (500mA) L1HZ-6570200000000 (400mA) **L1HZ-FCB1100000000 (300mA)** Have been tested according to the IEC 62471(first edition, 2006-07) **at 200mm** and been classified as **RG 0.** Have been tested according to the EN 62471:2008 **at 200mm** and been classified as **RG 1.** Have been tested according to the IEC/TR 62778:2014 and been classified as **RG 1 Unlimited for blue light hazard**. The tested sample of L1HZ-3070200000000 (2000mA) L1HZ-5070200000000 (2000mA) L1HZ-6570200000000 (2000mA) **L1HZ-FCB1100000000 (700mA)** Have been tested according to the IEC 62471(first edition, 2006-07) **at 200mm** and been classified as **RG 2**. Have been tested according to the EN 62471:2008 **at 200mm** and been classified as **RG 2**. Have been tested according to the IEC/TR 62778:2014 and been classified as **RG 2 for blue light hazard**.	DEKRA Testing and Certification (Shanghai) Ltd. 3/F, #250, Jiangchangsan Road building 16 Headquater Economy Park Shibei Hi-Tech Park, Jing'an District, Shanghai, P.R.C 200436

Summary of compliance with National Differences (List of countries addressed): EN Standards

EN 62471:2008

☒ **The product fulfills the requirements**

Copy of marking plate:

The artwork below may be only a draft. The use of certification marks on a product must be authorized by the respective NCBs that own these marks.

N/A

Test item particulars ..... :	See below
Product evaluated ..... :	☒ **LED package** ☐ **LED module** ☐ **Lamp** ☐ **Luminaire**
Rated voltage (V) ..... :	--
Rated current (mA) ..... :	Max 2000 mA
Rated CCT (K) ..... :	--
Rated Luminance (Mcd/m^2) ..... :	--
Component report data used ..... :	☒ **Not applicable** ☐ **LED package** ☐ **LED module** ☐ **Lamp** Report number: --
Possible test case verdicts:	
- test case does not apply to the test object ..... :	N/A
- test object does meet the requirement ..... :	P (Pass)
- test object does not meet the requirement ..... :	F (Fail)
Testing ..... :	--
Date of receipt of test item ..... :	2022-01-28
Date (s) of performance of tests ..... :	2022-02-09

General remarks:

"(See Enclosure #)" refers to additional information appended to the report.
"(See appended table)" refers to a table appended to the report.

Throughout this report a ☒ comma / ☐ point is used as the decimal separator.

The product complied with the following standards:

☒ IEC 62471:2006
☒ EN 62471:2008
☐ IEC/TR 62471-2:2009
☒ IEC/TR 62778:2014

Decision rules applied Procedure 2 “Accuracy Method” as stated in the IEC Guide 115:2007.

Manufacturer’s Declaration per sub-clause 4.2.5 of IECEE 02:

The application for obtaining a CB Test Certificate includes more than one factory location and a declaration from the Manufacturer stating that the sample(s) submitted for evaluation is (are) representative of the products from each factory has been provided ..... :	☐ **Yes** ☒ **Not applicable**

When differences exist; they shall be identified in the General product information section.

Name and address of factory (ies)..... : Lumileds Malaysia Sdn. Bhd.
No. 3 , Lintang Bayan Lepas 8, Phase 4, Bayan Lepas Industrial Park, 11900 Penang, Malaysia

General product information:

Full tests were performed on model L1HZ-3070200000000, L1HZ-5070200000000, L1HZ-6570200000000 and L1HZ-FCB1100000000.

The products considered as worst case which should be evaluated at 200mm.

The sample of L1HZ-3070200000000, L1HZ-5070200000000, L1HZ-6570200000000 and L1HZ-FCB1100000000was tested at 200mm from the light source.

Base on the Model list which listed on the appendix 2, The tested sample can be considered as
☐ typical product ☒ worst product
Which the results can be reference used for the other models.

Type test was performed according to IEC 62471:2006 procedure.

Amendment 1 report:

The original test report 6106990.50P, dated 2020-12-24 was modified to include the following additions:

- New models L1HZ – aaaa1zzzzzzzz were added in Model list with bold letters.

After review, Full tests were performed on model **L1HZ-FCB1100000000**.

IEC TR 62778			
Clause	Requirement + Test	Result - Remark	Verdict

7	**MEASUREMENT INFORMATION FLOW**		**P**
7.1	**Basic flow**		**P**
	'Law of conservation of luminance' applied		N/A
	Use of only true luminance/radiance values		P
	In case of luminaire: The light source is operated in the luminaire under similar conditions as when tested as a component		N/A
	In case E_{thr} value for RG2 was established the peak value was derived from angular light distribution		N/A
7.2	**Conditions for the radiance measurement**		**P**
	Standard condition applied (200mm distance, 0,011rad field of view)		P
	Non-standard condition applied		N/A
7.3	**Special cases (I): Replacement by a lamp or LED module of another type**		**N/A**
	Light source is a white light source		N/A
	Evaluation done based on highest luminance		N/A
	Evaluation done based on CCT value		N/A
7.4	**Special cases (II): Arrays and clusters of primary light sources**		**N/A**
	LED package is evaluated as .....:	☐RG0 unlimited ☐ RG1 unlimited	N/A
	E_{thr} of LED package applies to array		N/A
8	**RISK GROUP CLASSIFICATION**		**P**
	Risk group achieved:		P
	-...Risk Group 0 unlimited		N/A
	-...Risk Group 1 unlimited	L1HZ-3070200000000 (1000mA); L1HZ-5070200000000 (500mA); L1HZ-6570200000000 (400mA) **L1HZ-FCB1100000000 (700mA)**	P
	- E_{thr}..... (lx) : Distance to reach RG1..... (m) :	Refer to the Supplementary information of **TABLE:Spectroradiometric measurement** as following	P

IEC TR 62778			
Clause	Requirement + Test	Result - Remark	Verdict

	TABLE:Spectroradiometric measurement		
	Measurement performed on:	☒ **LED package** ☐ **LED module** ☐ **Lamp** ☐ **Luminaire**	
	Model number	L1HZ-3070200000000	
	Test voltage (V)	--	—
	Test current (mA)	2000 mA	—
	Test frequency (Hz)	--	—
	Ambient, t(°C).....	25°C	—
	Measurement distance.....	☒ 20 cm ☐ ... cm	—
	Source size	☐ Non-small ☒ Small :	—
	Field of view	☐ 100 mrad ☐ 11 mrad ☒ for small sources	—

Item	Symbol	Units	Result	Remark
Correlated colour temperature	CCT	K	3687	
x/y colour coordinates			0,3850/0,3547	
Blue light hazard radiance	L_B	$W/(m^2 \cdot sr^1)$	--	@11mrad
Blue light hazard irradiance	E_B	W/m^2	1,33E+00	
Luminance	L	cd/m^2	--	@11mrad
Illuminance	E	lx	2,85E+03	

Supplementary information:

Per IEC/TR 62778:2014
Ethr= 1685 lx

Dmin= 231 mm

IEC TR 62778			
Clause	Requirement + Test	Result - Remark	Verdict

	TABLE:Spectroradiometric measurement		
	Measurement performed on:	☒ **LED package** ☐ **LED module** ☐ **Lamp** ☐ **Luminaire**	
	Model number	L1HZ-3070200000000	
	Test voltage (V)	--	—
	Test current (mA)	1000 mA	—
	Test frequency (Hz)	--	—
	Ambient, t(°C).....	25°C	—
	Measurement distance.....	☒ 20 cm ☐ ... cm	—
	Source size	☐ Non-small ☒ Small :	—
	Field of view	☐ 100 mrad ☐ 11 mrad ☒ for small sources	—

Item	Symbol	Units	Result	Remark
Correlated colour temperature	CCT	K	3218	
x/y colour coordinates			0,4148/0,3815	
Blue light hazard radiance	L_B	$W/(m^2 \cdot sr^1)$	--	@11mrad
Blue light hazard irradiance	E_B	W/m^2	0,94E+00	
Luminance	L	cd/m^2	--	@11mrad
Illuminance	E	lx	2,17E+03	

Supplementary information:
N/A

IEC TR 62778			
Clause	Requirement + Test	Result - Remark	Verdict

	TABLE:Spectroradiometric measurement		
	Measurement performed on:	☒ **LED package** ☐ **LED module** ☐ **Lamp** ☐ **Luminaire**	
	Model number	L1HZ-5070200000000	
	Test voltage (V)	--	—
	Test current (mA)	2000 mA	—
	Test frequency (Hz)	--	—
	Ambient, t(°C).....	25**°C**	—
	Measurement distance.....	☒ 20 cm ☐ ... cm	—
	Source size	☐ Non-small ☒ Small :	—
	Field of view	☐ 100 mrad ☐ 11 mrad ☒ for small sources	—

Item	Symbol	Units	Result	Remark
Correlated colour temperature	CCT	K	6241	
x/y colour coordinates			0,3187/0,3185	
Blue light hazard radiance	L_B	$W/(m^2 \cdot sr^1)$	--	@11mrad
Blue light hazard irradiance	E_B	W/m^2	3,14E+00	
Luminance	L	cd/m^2	--	@11mrad
Illuminance	E	lx	3,41E+03	

Supplementary information:

Per IEC/TR 62778:2014
Ethr= 1086 lx

Dmin= 354 mm

IEC TR 62778			
Clause	Requirement + Test	Result - Remark	Verdict

	TABLE:Spectroradiometric measurement		
	Measurement performed on:	☒ **LED package** ☐ **LED module** ☐ **Lamp** ☐ **Luminaire**	
	Model number	L1HZ-5070200000000	
	Test voltage (V)	--	—
	Test current (mA)	500 mA	—
	Test frequency (Hz)	--	—
	Ambient, t(°C).....	25°**C**	—
	Measurement distance.....	☒ 20 cm ☐ ... cm	—
	Source size	☐ Non-small ☒ Small :	—
	Field of view	☐ 100 mrad ☐ 11 mrad ☒ for small sources	—

Item	Symbol	Units	Result	Remark
Correlated colour temperature	CCT	K	5358	
x/y colour coordinates			0,3357/0,3440	
Blue light hazard radiance	L_B	$W/(m^2 \cdot sr^1)$	--	@11mrad
Blue light hazard irradiance	E_B	W/m^2	0,98E+00	
Luminance	L	cd/m^2	--	@11mrad
Illuminance	E	lx	1,34E+03	

Supplementary information:
N/A

IEC TR 62778			
Clause	Requirement + Test	Result - Remark	Verdict

	TABLE:Spectroradiometric measurement		
	Measurement performed on:	☒ **LED package** ☐ **LED module** ☐ **Lamp** ☐ **Luminaire**	
	Model number	L1HZ-6570200000000	
	Test voltage (V)	--	—
	Test current (mA)	2000 mA	—
	Test frequency (Hz)	--	—
	Ambient, t(°C).....	25**°C**	—
	Measurement distance.....	☒ 20 cm ☐ ... cm	—
	Source size	☐ Non-small ☒ Small :	—
	Field of view	☐ 100 mrad ☐ 11 mrad ☒ for small sources	—

Item	Symbol	Units	Result	Remark
Correlated colour temperature	CCT	K	8289	
x/y colour coordinates			0,2949/0,2955	
Blue light hazard radiance	L_B	$W/(m^2 \cdot sr^1)$	--	@11mrad
Blue light hazard irradiance	E_B	W/m^2	4,58E+00	
Luminance	L	cd/m^2	--	@11mrad
Illuminance	E	lx	4,00E+03	

Supplementary information:

Per IEC/TR 62778:2014
Ethr= 873 lx

Dmin= 428 mm

IEC TR 62778			
Clause	Requirement + Test	Result - Remark	Verdict

	TABLE:Spectroradiometric measurement		
	Measurement performed on:	☒ **LED package** ☐ **LED module** ☐ **Lamp** ☐ **Luminaire**	
	Model number	L1HZ-6570200000000	
	Test voltage (V)	--	—
	Test current (mA)	400 mA	—
	Test frequency (Hz)	--	—
	Ambient, t(°C).....	25°**C**	—
	Measurement distance.....	☒ 20 cm ☐ ... cm	—
	Source size	☐ Non-small ☒ Small :	—
	Field of view	☐ 100 mrad ☐ 11 mrad ☒ for small sources	—

Item	Symbol	Units	Result	Remark
Correlated colour temperature	CCT	K	7011	
x/y colour coordinates			0,3059/0,3179	
Blue light hazard radiance	L_B	$W/(m^2 \cdot sr^1)$	--	@11mrad
Blue light hazard irradiance	E_B	W/m^2	0,99E+00	
Luminance	L	cd/m^2	--	@11mrad
Illuminance	E	lx	1,04E+03	

Supplementary information:
N/A

IEC TR 62778			
Clause	Requirement + Test	Result - Remark	Verdict

	TABLE:Spectroradiometric measurement		
	Measurement performed on:	☒ **LED package** ☐ **LED module** ☐ **Lamp** ☐ **Luminaire**	
	Model number	L1HZ-FCB1100000000	
	Test voltage (V)	--	—
	Test current (mA)	700 mA	—
	Test frequency (Hz)	--	—
	Ambient, t(°C).....	25°**C**	—
	Measurement distance.....	☒ 20 cm ☐ ... cm	—
	Source size	☐ Non-small ☒ Small :	—
	Field of view	☐ 100 mrad ☐ 11 mrad ☒ for small sources	—

Item	Symbol	Units	Result	Remark
Correlated colour temperature	CCT	K	--	
x/y colour coordinates			--	
Blue light hazard radiance	L_B	$W/(m^2 \cdot sr^1)$	--	@11mrad
Blue light hazard irradiance	E_B	W/m^2	1,70E+00	
Luminance	L	cd/m^2	--	@11mrad
Illuminance	E	lx	1,48E+03	

Supplementary information:

Per IEC/TR 62778:2014
Ethr= 871 lx

Dmin= 261 mm

IEC TR 62778			
Clause	Requirement + Test	Result - Remark	Verdict

	TABLE:Spectroradiometric measurement		
	Measurement performed on:	☒ **LED package** ☐ **LED module** ☐ **Lamp** ☐ **Luminaire**	
	Model number	L1HZ-FCB1100000000	
	Test voltage (V)	--	—
	Test current (mA)	300 mA	—
	Test frequency (Hz)	--	—
	Ambient, t(°C).....	25**°C**	—
	Measurement distance.....	☒ 20 cm ☐ ... cm	—
	Source size	☐ Non-small ☒ Small :	—
	Field of view	☐ 100 mrad ☐ 11 mrad ☒ for small sources	—

Item	Symbol	Units	Result	Remark
Correlated colour temperature	CCT	K		
x/y colour coordinates			--	
Blue light hazard radiance	L_B	$W/(m^2 \cdot sr^1)$	--	@11mrad
Blue light hazard irradiance	E_B	W/m^2	0,94E+00	
Luminance	L	cd/m^2	--	@11mrad
Illuminance	E	lx	6,27E+02	

Supplementary information:
N/A

IEC TR 62778			
Clause	Requirement + Test	Result - Remark	Verdict

	TABLE: Angular light distribution	**N/A**

List of test equipment used:

A completed list of used test equipment shall be provided in the Test Reports when a Manufacturer Testing Laboratory according to CTF stage 1 or CTF stage 2 procedure has been used.
Note: This page may be removed when CTF stage 1 CTF stage 2 are not used. See also clause 4.8 in OD 2020 for more details.

Clause	Measurement / testing	Testing / measuring equipment / material used, (Equipment ID)	Range used	Last Calibration date	Calibration due date
7	Irradiance measurements Radiance measurements	IDR 300 Monochromator (SH 344)	200-3000nm	/	/
7	Radiance measurements	S009 Telescope (SH 345)	300-1400nm	/	/
7	Radiance measurements	SRS 12 Radiance Standard (SH 348)	300-1400nm	2021/2/25	2022/2/24
7	Irradiance measurements	CL6 Spectral irradiance standard (SH 350)	300-3000nm	2021/2/25	2022/2/24
7	Irradiance measurements	CL7 Spectral irradiance standard (SH 351)	200-400nm	2021/2/25	2022/2/24
7	Irradiance measurements	Photometric detector head (SH 359)	380nm-800nm	2021/2/26	2022/2/25
7	Irradiance measurements Radiance measurements	Wattmeter (SH030)	500V,40A	2021/10/10	2022/10/10

Appendix 1: Photo Documentation

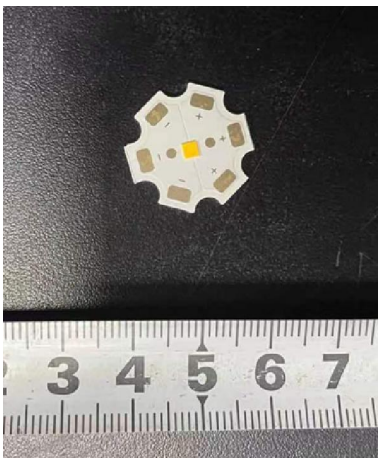

L1HZ-3070200000000

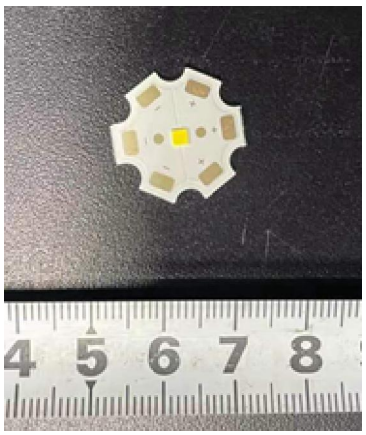

L1HZ-5070200000000

L1HZ-6570200000000

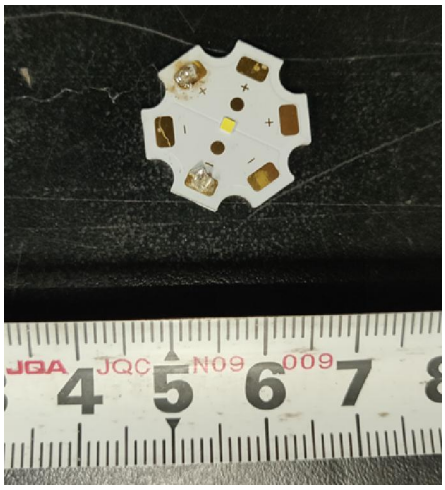

L1HZ-FCB1100000000

The nominal package size:

HL1Z (1.4*1.4* 0.36mm or 1.4*1.4*0.38mm)

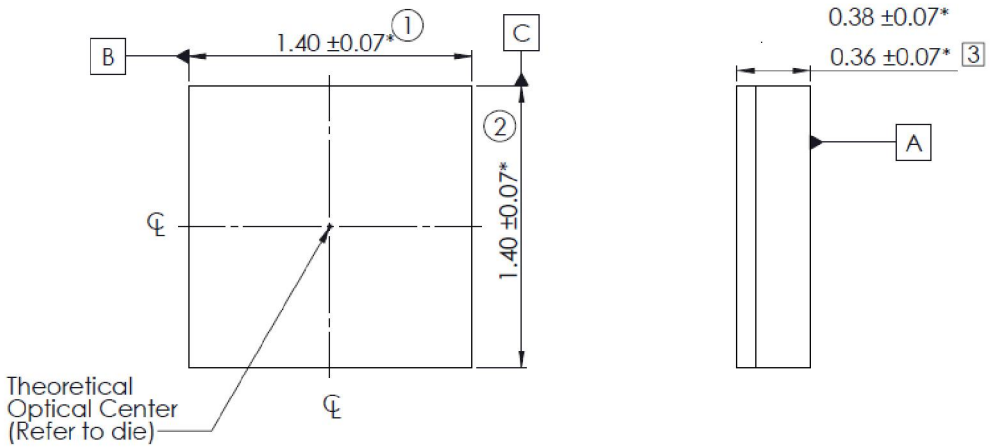

HL2Z (2.3*2.3*0.36mm)

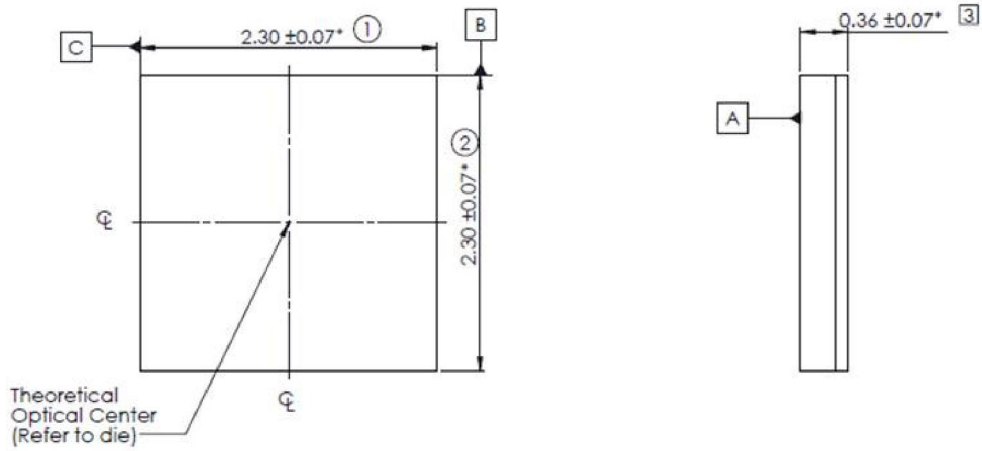

Appendix 2: Model List

HL1Z	HL2Z
Product nomenclature for white: L1HZ-xxyy1zzzzzzzz xx = CCT (nominal CCT less than or equal to 65 = 6500K); yy = CRI; zzzzzzzz = Option codes for product marketing use **Product nomenclature for non-white or colors:** **L1HZ – aaaa1zzzzzzzz** **aaaa = Color designation for non-white and color options such that the blue content is less than L1HZ-FCB1100000000 as worst case product as tested;** **zzzzzzzz = Option codes for product marketing use**	Product nomenclature for white: L1HZ-xxyy2zzzzzzzz xx = CCT (nominal CCT less than or equal to 65 = 6500K); yy = CRI; zzzzzzzz = Option codes for product marketing use

Threshold drive current for RG1-RG2 boundary limit:

		Nominal CCT		
	Threshold drive current (mA)	≤3000K	≤5000K	≤6500K
Product nomenclature for white: L1HZ – xxyy1zzzzzzzz L1HZ –xxyy2zzzzzzzz	2000	RG2	RG2	RG2
	1000	RG1 unlimited	RG2	RG2
	500	RG1 unlimited	RG1 unlimited	RG2
	400	RG1 unlimited	RG1 unlimited	RG1 unlimited

	Threshold drive current (mA)	**Red, Green, Blue, Cyan, Long Cyan**
Product nomenclature for non-white or colors: L1HZ – aaaa1zzzzzzzz	**700**	**RG2**
	300	**RG1 unlimited**

Ethr (lx)

		Nominal CCT		
	Threshold drive current (mA)	≤3000K	≤5000K	≤6500K
Product nomenclature for white: L1HZ – xxyy1zzzzzzzz L1HZ –xxyy2zzzzzzzz	2000	1685 lx	1086 lx	873 lx
	1000	n/a	1086 lx	873 lx
	500	n/a	n/a	873 lx
	400	n/a	n/a	n/a

	Threshold drive current (mA)	**Red, Green, Blue, Cyan, Long Cyan**
Product nomenclature for non-white or colors: L1HZ – aaaa1zzzzzzzz	**700**	**871 lx**
	300	**n/a**

Appendix 3: Relative Spectrum Of Tested Sample(s)

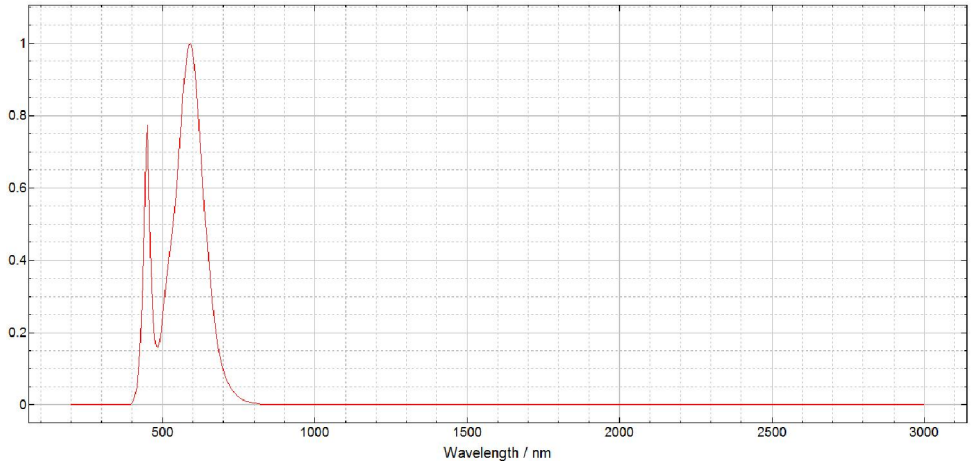

L1HZ-3070200000000

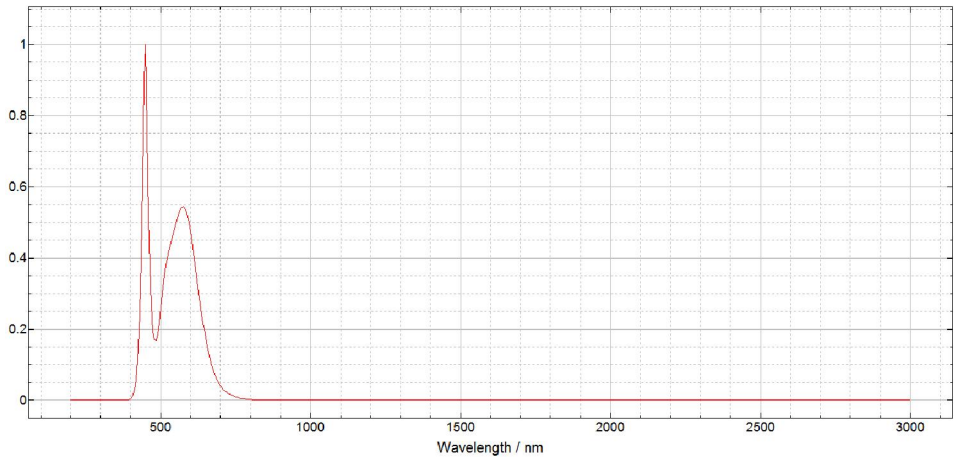

L1HZ-5070200000000

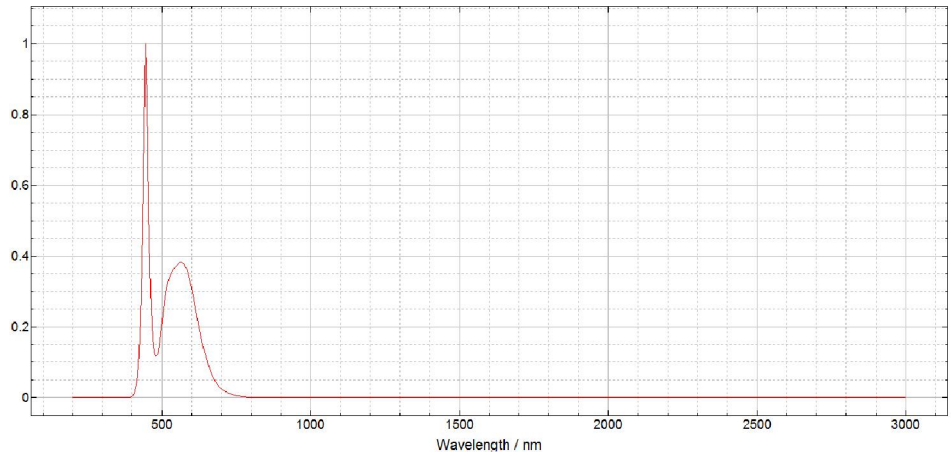

L1HZ-6570200000000

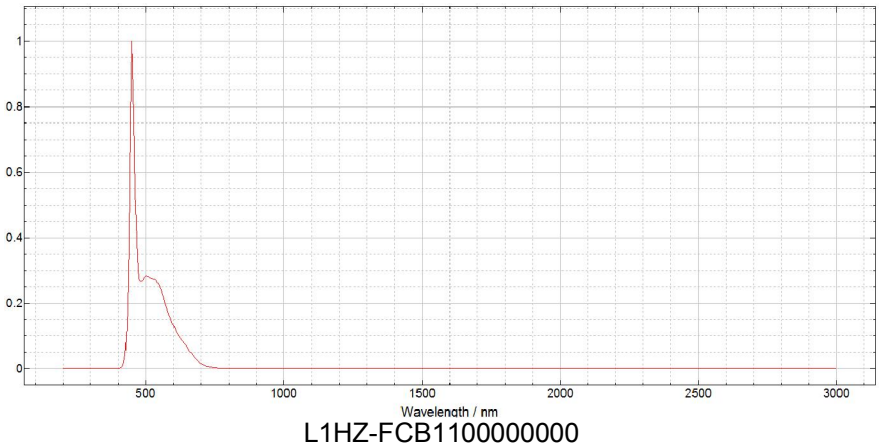

L1HZ-FCB1100000000

Appendix 4: Table 6.1 Based On IEC 62471:2006

DUT: L1HZ-3070200000000 (2000mA), Evaluation Distance: 200mm, Angular subtense of the apparent source α: 7 mrad

IEC 62471			
Clause	Requirement + Test	Result – Remark	Verdict

Table 6.1	Emission limits for risk groups of continuous wave lamps								
Risk	Action spectrum	Symbol	Units	Emission Measurement					
				Exempt		Low risk		Mod risk	
				Limit	Result	Limit	Result	Limit	Result
Actinic UV	$S_{UV}(\lambda)$	E_s	$W \cdot m^{-2}$	0,001	0,0000	0,003		0,03	
Near UV		E_{UVA}	$W \cdot m^{-2}$	10	0,0000	33		100	
Blue light	$B(\lambda)$	L_B	$W \cdot m^{-2} \cdot sr^{-1}$	100	--	10000		4000000	
Blue light, small source	$B(\lambda)$	E_B	$W \cdot m^{-2}$	1,0*	1,33	1,0	1,33	400	1,33
Retinal thermal	$R(\lambda)$	L_R	$W \cdot m^{-2} \cdot sr^{-1}$	28000/α	3,73E+05	28000/α		71000/α	
Retinal thermal, weak visual stimulus**	$R(\lambda)$	L_{IR}	$W \cdot m^{-2} \cdot sr^{-1}$	6000/α	--	6000/α		6000/α	
IR radiation, eye		E_{IR}	$W \cdot m^{-2}$	100	0,09	570		3200	

* Small source defined as one with α < 0,011 radian. Averaging field of view at 10000 s is 0,1 radian.

** Involves evaluation of non-GLS source

DUT: L1HZ-3070200000000 (1000mA), Evaluation Distance: 200mm, Angular subtense of the apparent source α: 7 mrad

IEC 62471			
Clause	Requirement + Test	Result – Remark	Verdict

Table 6.1	Emission limits for risk groups of continuous wave lamps									
Risk	Action spectrum	Symbol	Units	Emission Measurement					
				Exempt		Low risk		Mod risk	
				Limit	Result	Limit	Result	Limit	Result
Actinic UV	$S_{UV}(\lambda)$	E_s	$W \cdot m^{-2}$	0,001	0,0000	0,003		0,03	
Near UV		E_{UVA}	$W \cdot m^{-2}$	10	0,0000	33		100	
Blue light	$B(\lambda)$	L_B	$W \cdot m^{-2} \cdot sr^{-1}$	100	--	10000		4000000	
Blue light, small source	$B(\lambda)$	E_B	$W \cdot m^{-2}$	1,0*	0,94	1,0		400	
Retinal thermal	$R(\lambda)$	L_R	$W \cdot m^{-2} \cdot sr^{-1}$	28000/α	3,24E+05	28000/α		71000/α	
Retinal thermal, weak visual stimulus**	$R(\lambda)$	L_{IR}	$W \cdot m^{-2} \cdot sr^{-1}$	6000/α	--	6000/α		6000/α	
IR radiation, eye		E_{IR}	$W \cdot m^{-2}$	100	0,05	570		3200	

* Small source defined as one with α < 0,011 radian. Averaging field of view at 10000 s is 0,1 radian.
** Involves evaluation of non-GLS source

DUT: L1HZ-5070200000000 (2000mA), Evaluation Distance: 200mm, Angular subtense of the apparent source α: 7 mrad

IEC 62471			
Clause	Requirement + Test	Result – Remark	Verdict

Table 6.1	Emission limits for risk groups of continuous wave lamps									
Risk	Action spectrum	Symbol	Units	Emission Measurement						
				Exempt		Low risk		Mod risk		
				Limit	Result	Limit	Result	Limit	Result	
Actinic UV	$S_{UV}(\lambda)$	E_s	$W \cdot m^{-2}$	0,001	0,0000	0,003		0,03		
Near UV		E_{UVA}	$W \cdot m^{-2}$	10	0,0000	33		100		
Blue light	B(λ)	L_B	$W \cdot m^{-2} \cdot sr^{-1}$	100	--	10000		4000000		
Blue light, small source	B(λ)	E_B	$W \cdot m^{-2}$	1,0*	3,14	1,0	3,14	400	3,14	
Retinal thermal	R(λ)	L_R	$W \cdot m^{-2} \cdot sr^{-1}$	28000/α	7,99E+05	28000/α		71000/α		
Retinal thermal, weak visual stimulus**	R(λ)	L_{IR}	$W \cdot m^{-2} \cdot sr^{-1}$	6000/α	--	6000/α		6000/α		
IR radiation, eye		E_{IR}	$W \cdot m^{-2}$	100	0,08	570		3200		

* Small source defined as one with α < 0,011 radian. Averaging field of view at 10000 s is 0,1 radian.
** Involves evaluation of non-GLS source

DUT: L1HZ-5070200000000 (500mA), Evaluation Distance: 200mm, Angular subtense of the apparent source α: 7 mrad

IEC 62471			
Clause	Requirement + Test	Result – Remark	Verdict

Table 6.1	Emission limits for risk groups of continuous wave lamps									
Risk	Action spectrum	Symbol	Units	Emission Measurement						
				Exempt		Low risk		Mod risk		
				Limit	Result	Limit	Result	Limit	Result	
Actinic UV	$S_{UV}(\lambda)$	E_s	$W \cdot m^{-2}$	0,001	0,0000	0,003		0,03		
Near UV		E_{UVA}	$W \cdot m^{-2}$	10	0,0000	33		100		
Blue light	$B(\lambda)$	L_B	$W \cdot m^{-2} \cdot sr^{-1}$	100	--	10000		4000000		
Blue light, small source	$B(\lambda)$	E_B	$W \cdot m^{-2}$	1,0*	0,98	1,0		400		
Retinal thermal	$R(\lambda)$	L_R	$W \cdot m^{-2} \cdot sr^{-1}$	28000/α	2,76E+05	28000/α		71000/α		
Retinal thermal, weak visual stimulus**	$R(\lambda)$	L_{IR}	$W \cdot m^{-2} \cdot sr^{-1}$	6000/α	--	6000/α		6000/α		
IR radiation, eye		E_{IR}	$W \cdot m^{-2}$	100	0,04	570		3200		

* Small source defined as one with α < 0,011 radian. Averaging field of view at 10000 s is 0,1 radian.
** Involves evaluation of non-GLS source

DUT: L1HZ-6570200000000 (2000mA), Evaluation Distance: 200mm, Angular subtense of the apparent source α: 7 mrad

IEC 62471			
Clause	Requirement + Test	Result – Remark	Verdict

Table 6.1	Emission limits for risk groups of continuous wave lamps									
Risk	Action spectrum	Symbol	Units	Emission Measurement					
				Exempt		Low risk		Mod risk	
				Limit	Result	Limit	Result	Limit	Result
Actinic UV	$S_{UV}(\lambda)$	E_s	$W \cdot m^{-2}$	0,001	0,0000	0,003		0,03	
Near UV		E_{UVA}	$W \cdot m^{-2}$	10	0,0000	33		100	
Blue light	$B(\lambda)$	L_B	$W \cdot m^{-2} \cdot sr^{-1}$	100	--	10000		4000000	
Blue light, small source	$B(\lambda)$	E_B	$W \cdot m^{-2}$	1,0*	4,58	1,0	4,58	400	4,58
Retinal thermal	$R(\lambda)$	L_R	$W \cdot m^{-2} \cdot sr^{-1}$	28000/α	1,08E+06	28000/α		71000/α	
Retinal thermal, weak visual stimulus**	$R(\lambda)$	L_{IR}	$W \cdot m^{-2} \cdot sr^{-1}$	6000/α	--	6000/α		6000/α	
IR radiation, eye		E_{IR}	$W \cdot m^{-2}$	100	0,06	570		3200	

* Small source defined as one with α < 0,011 radian. Averaging field of view at 10000 s is 0,1 radian.
** Involves evaluation of non-GLS source

DUT: L1HZ-6570200000000 (400mA), Evaluation Distance: 200mm, Angular subtense of the apparent source α: 7 mrad

IEC 62471			
Clause	Requirement + Test	Result – Remark	Verdict

Table 6.1	Emission limits for risk groups of continuous wave lamps									
Risk	Action spectrum	Symbol	Units	Emission Measurement						
				Exempt		Low risk		Mod risk		
				Limit	Result	Limit	Result	Limit	Result	
Actinic UV	$S_{UV}(\lambda)$	E_s	$W \cdot m^{-2}$	0,001	0,0000	0,003		0,03		
Near UV		E_{UVA}	$W \cdot m^{-2}$	10	0,0000	33		100		
Blue light	$B(\lambda)$	L_B	$W \cdot m^{-2} \cdot sr^{-1}$	100	--	10000		4000000		
Blue light, small source	$B(\lambda)$	E_B	$W \cdot m^{-2}$	1,0*	0,99	1,0		400		
Retinal thermal	$R(\lambda)$	L_R	$W \cdot m^{-2} \cdot sr^{-1}$	28000/α	2,74E+05	28000/α		71000/α		
Retinal thermal, weak visual stimulus**	$R(\lambda)$	L_{IR}	$W \cdot m^{-2} \cdot sr^{-1}$	6000/α	--	6000/α		6000/α		
IR radiation, eye		E_{IR}	$W \cdot m^{-2}$	100	0,04	570		3200		

* Small source defined as one with α < 0,011 radian. Averaging field of view at 10000 s is 0,1 radian.
** Involves evaluation of non-GLS source

DUT: L1HZ-FCB1100000000 (700mA), Evaluation Distance: 200mm, Angular subtense of the apparent source α: 5 mrad

IEC 62471			
Clause	Requirement + Test	Result – Remark	Verdict

Table 6.1	Emission limits for risk groups of continuous wave lamps									
Risk	Action spectrum	Symbol	Units	Emission Measurement					
				Exempt		Low risk		Mod risk	
				Limit	Result	Limit	Result	Limit	Result
Actinic UV	$S_{UV}(\lambda)$	E_s	$W \cdot m^{-2}$	0,001	0,0000	0,003		0,03	
Near UV		E_{UVA}	$W \cdot m^{-2}$	10	0,0000	33		100	
Blue light	$B(\lambda)$	L_B	$W \cdot m^{-2} \cdot sr^{-1}$	100	--	10000		4000000	
Blue light, small source	$B(\lambda)$	E_B	$W \cdot m^{-2}$	1,0*	1,70	1,0	1,70	400	1,70
Retinal thermal	$R(\lambda)$	L_R	$W \cdot m^{-2} \cdot sr^{-1}$	28000/α	5,89E+05	28000/α		71000/α	
Retinal thermal, weak visual stimulus**	$R(\lambda)$	L_{IR}	$W \cdot m^{-2} \cdot sr^{-1}$	6000/α	--	6000/α		6000/α	
IR radiation, eye		E_{IR}	$W \cdot m^{-2}$	100	0,04	570		3200	

* Small source defined as one with α < 0,011 radian. Averaging field of view at 10000 s is 0,1 radian.
** Involves evaluation of non-GLS source

DUT: L1HZ-FCB1100000000 (300mA), Evaluation Distance: 200mm, Angular subtense of the apparent source α: 5 mrad

IEC 62471			
Clause	Requirement + Test	Result – Remark	Verdict

Table 6.1	Emission limits for risk groups of continuous wave lamps								
Risk	Action spectrum	Symbol	Units	Emission Measurement					
				Exempt		Low risk		Mod risk	
				Limit	Result	Limit	Result	Limit	Result
Actinic UV	$S_{UV}(\lambda)$	E_s	$W \cdot m^{-2}$	0,001	0,0000	0,003		0,03	
Near UV		E_{UVA}	$W \cdot m^{-2}$	10	0,0000	33		100	
Blue light	$B(\lambda)$	L_B	$W \cdot m^{-2} \cdot sr^{-1}$	100	--	10000		4000000	
Blue light, small source	$B(\lambda)$	E_B	$W \cdot m^{-2}$	1,0*	0,94	1,0		400	
Retinal thermal	$R(\lambda)$	L_R	$W \cdot m^{-2} \cdot sr^{-1}$	28000/α	2,44E+05	28000/α		71000/α	
Retinal thermal, weak visual stimulus**	$R(\lambda)$	L_{IR}	$W \cdot m^{-2} \cdot sr^{-1}$	6000/α	--	6000/α		6000/α	
IR radiation, eye		E_{IR}	$W \cdot m^{-2}$	100	0,03	570		3200	

* Small source defined as one with α < 0,011 radian. Averaging field of view at 10000 s is 0,1 radian.
** Involves evaluation of non-GLS source

Appendix 5: Table 6.1 Based On EN62471:2008, Attachment To IEC 62471 European Group Differences And National Differences
DUT: L1HZ-3070200000000 (2000mA), Evaluation Distance: 200mm, Angular subtense of the apparent source α: 7 mrad

EN 62471			
Clause	Requirement + Test	Result – Remark	Verdict

Table 6.1	Emission limits for risk groups of continuous wave lamps (based on EU Directive 2006/25/EC)									
Risk	Action spectrum	Symbol	Units	Emission Measurement					
				Exempt		Low risk		Mod risk	
				Limit	Result	Limit	Result	Limit	Result
Actinic UV	$S_{UV}(\lambda)$	E_s	$W \cdot m^{-2}$	0,001	0,0000	--	--	--	--
Near UV		E_{UVA}	$W \cdot m^{-2}$	0,33	0,0000	--	--	--	--
Blue light	B(λ)	L_B	$W \cdot m^{-2} \cdot sr^{-1}$	100	--	10000		4000000	
Blue light, small source	B(λ)	E_B	$W \cdot m^{-2}$	0,01*	1,33	1,0	1,33	400	1,33
Retinal thermal	R(λ)	L_R	$W \cdot m^{-2} \cdot sr^{-1}$	28000/α	3,73E+05	28000/α		71000/α	
Retinal thermal, weak visual stimulus**	R(λ)	L_{IR}	$W \cdot m^{-2} \cdot sr^{-1}$	545000 0,0017≤ α ≤ 0,011	--				
				6000/α 0,011≤ α ≤ 0,1	--				
IR radiation, eye		E_{IR}	$W \cdot m^{-2}$	100	0,09	570		3200	

* Small source defined as one with α < 0,011 radian. Averaging field of view at 10000 s is 0,1 radian.
** Involves evaluation of non-GLS source

NOTE The action functions: see Table 4.1 and Table 4.2
The applicable aperture diameters: see 4.2.1
The limitations for the angular subtenses: see 4.2.2
The related measurement condition 5.2.3 and the range of acceptance angles: see Table 5.5.

DUT: L1HZ-3070200000000 (1000mA), Evaluation Distance: 200mm, Angular subtense of the apparent source α: 7 mrad

EN 62471			
Clause	Requirement + Test	Result – Remark	Verdict

Table 6.1	Emission limits for risk groups of continuous wave lamps (based on EU Directive 2006/25/EC)									
Risk	Action spectrum	Symbol	Units	Emission Measurement						
				Exempt		Low risk		Mod risk		
				Limit	Result	Limit	Result	Limit	Result	
Actinic UV	$S_{UV}(\lambda)$	E_s	$W \cdot m^{-2}$	0,001	0,0000	--	--	--	--	
Near UV		E_{UVA}	$W \cdot m^{-2}$	0,33	0,0000	--	--	--	--	
Blue light	B(λ)	L_B	$W \cdot m^{-2} \cdot sr^{-1}$	100	--	10000		4000000		
Blue light, small source	B(λ)	E_B	$W \cdot m^{-2}$	0,01*	0,94	1,0		400		
Retinal thermal	R(λ)	L_R	$W \cdot m^{-2} \cdot sr^{-1}$	28000/α	3,24E+05	28000/α		71000/α		
Retinal thermal, weak visual stimulus**	R(λ)	L_{IR}	$W \cdot m^{-2} \cdot sr^{-1}$	545000 0,0017≤ α ≤ 0,011	--					
				6000/α 0,011≤ α ≤ 0,1	--					
IR radiation, eye		E_{IR}	$W \cdot m^{-2}$	100	0,05	570		3200		

* Small source defined as one with α < 0,011 radian. Averaging field of view at 10000 s is 0,1 radian.
** Involves evaluation of non-GLS source

NOTE The action functions: see Table 4.1 and Table 4.2
The applicable aperture diameters: see 4.2.1
The limitations for the angular subtenses: see 4.2.2
The related measurement condition 5.2.3 and the range of acceptance angles: see Table 5.5.

DUT: L1HZ-5070200000000 (2000mA), Evaluation Distance: 200mm, Angular subtense of the apparent source α: 7 mrad

EN 62471			
Clause	Requirement + Test	Result – Remark	Verdict

Table 6.1	Emission limits for risk groups of continuous wave lamps (based on EU Directive 2006/25/EC)									
Risk	Action spectrum	Symbol	Units	Emission Measurement						
				Exempt		Low risk		Mod risk		
				Limit	Result	Limit	Result	Limit	Result	
Actinic UV	$S_{UV}(\lambda)$	E_s	$W \cdot m^{-2}$	0,001	0,0000	--	--	--	--	
Near UV		E_{UVA}	$W \cdot m^{-2}$	0,33	0,0000	--	--	--	--	
Blue light	B(λ)	L_B	$W \cdot m^{-2} \cdot sr^{-1}$	100	--	10000		4000000		
Blue light, small source	B(λ)	E_B	$W \cdot m^{-2}$	0,01*	3,14	1,0	3,14	400	3,14	
Retinal thermal	R(λ)	L_R	$W \cdot m^{-2} \cdot sr^{-1}$	28000/α	7,99E+05	28000/α		71000/α		
Retinal thermal, weak visual stimulus**	R(λ)	L_{IR}	$W \cdot m^{-2} \cdot sr^{-1}$	545000 0,0017≤ α ≤ 0,011	--					
				6000/α 0,011≤ α ≤ 0,1	--					
IR radiation, eye		E_{IR}	$W \cdot m^{-2}$	100	0,08	570		3200		

* Small source defined as one with α < 0,011 radian. Averaging field of view at 10000 s is 0,1 radian.
** Involves evaluation of non-GLS source

NOTE The action functions: see Table 4.1 and Table 4.2
The applicable aperture diameters: see 4.2.1
The limitations for the angular subtenses: see 4.2.2
The related measurement condition 5.2.3 and the range of acceptance angles: see Table 5.5.

DUT: L1HZ-5070200000000 (500mA), Evaluation Distance: 200mm, Angular subtense of the apparent source α: 7 mrad

EN 62471			
Clause	Requirement + Test	Result – Remark	Verdict

Table 6.1	Emission limits for risk groups of continuous wave lamps (based on EU Directive 2006/25/EC)									
Risk	Action spectrum	Symbol	Units	Emission Measurement						
				Exempt		Low risk		Mod risk		
				Limit	Result	Limit	Result	Limit	Result	
Actinic UV	$S_{UV}(\lambda)$	E_s	$W \cdot m^{-2}$	0,001	0,0000	--	--	--	--	
Near UV		E_{UVA}	$W \cdot m^{-2}$	0,33	0,0000	--	--	--	--	
Blue light	B(λ)	L_B	$W \cdot m^{-2} \cdot sr^{-1}$	100	--	10000		4000000		
Blue light, small source	B(λ)	E_B	$W \cdot m^{-2}$	0,01*	0,98	1,0		400		
Retinal thermal	R(λ)	L_R	$W \cdot m^{-2} \cdot sr^{-1}$	28000/α	2,76E+05	28000/α		71000/α		
Retinal thermal, weak visual stimulus**	R(λ)	L_{IR}	$W \cdot m^{-2} \cdot sr^{-1}$	545000 0,0017≤ α ≤ 0,011	--					
				6000/α 0,011≤ α ≤ 0,1	--					
IR radiation, eye		E_{IR}	$W \cdot m^{-2}$	100	0,04	570		3200		

* Small source defined as one with α < 0,011 radian. Averaging field of view at 10000 s is 0,1 radian.
** Involves evaluation of non-GLS source

NOTE The action functions: see Table 4.1 and Table 4.2
The applicable aperture diameters: see 4.2.1
The limitations for the angular subtenses: see 4.2.2
The related measurement condition 5.2.3 and the range of acceptance angles: see Table 5.5.

DUT: L1HZ-6570200000000 (2000mA), Evaluation Distance: 200mm, Angular subtense of the apparent source α: 7 mrad

EN 62471			
Clause	Requirement + Test	Result – Remark	Verdict

Table 6.1	Emission limits for risk groups of continuous wave lamps (based on EU Directive 2006/25/EC)									
Risk	Action spectrum	Symbol	Units	Emission Measurement						
				Exempt		Low risk		Mod risk		
				Limit	Result	Limit	Result	Limit	Result	
Actinic UV	$S_{UV}(\lambda)$	E_s	$W \cdot m^{-2}$	0,001	0,0000	--	--	--	--	
Near UV		E_{UVA}	$W \cdot m^{-2}$	0,33	0,0000	--	--	--	--	
Blue light	B(λ)	L_B	$W \cdot m^{-2} \cdot sr^{-1}$	100	--	10000		4000000		
Blue light, small source	B(λ)	E_B	$W \cdot m^{-2}$	0,01*	4,58	1,0	4,58	400	4,58	
Retinal thermal	R(λ)	L_R	$W \cdot m^{-2} \cdot sr^{-1}$	28000/α	1,08E+06	28000/α		71000/α		
Retinal thermal, weak visual stimulus**	R(λ)	L_{IR}	$W \cdot m^{-2} \cdot sr^{-1}$	545000 0,0017≤ α ≤ 0,011	--					
				6000/α 0,011≤ α ≤ 0,1	--					
IR radiation, eye		E_{IR}	$W \cdot m^{-2}$	100	0,06	570		3200		

* Small source defined as one with α < 0,011 radian. Averaging field of view at 10000 s is 0,1 radian.
** Involves evaluation of non-GLS source

NOTE The action functions: see Table 4.1 and Table 4.2
The applicable aperture diameters: see 4.2.1
The limitations for the angular subtenses: see 4.2.2
The related measurement condition 5.2.3 and the range of acceptance angles: see Table 5.5.

DUT: L1HZ-6570200000000 (400mA), Evaluation Distance: 200mm, Angular subtense of the apparent source α: 7 mrad

EN 62471			
Clause	Requirement + Test	Result – Remark	Verdict

Table 6.1	Emission limits for risk groups of continuous wave lamps (based on EU Directive 2006/25/EC)									
Risk	Action spectrum	Symbol	Units	Emission Measurement						
				Exempt		Low risk		Mod risk		
				Limit	Result	Limit	Result	Limit	Result	
Actinic UV	$S_{UV}(\lambda)$	E_s	$W \cdot m^{-2}$	0,001	0,0000	--	--	--	--	
Near UV		E_{UVA}	$W \cdot m^{-2}$	0,33	0,0000	--	--	--	--	
Blue light	B(λ)	L_B	$W \cdot m^{-2} \cdot sr^{-1}$	100	--	10000		4000000		
Blue light, small source	B(λ)	E_B	$W \cdot m^{-2}$	0,01*	0,99	1,0		400		
Retinal thermal	R(λ)	L_R	$W \cdot m^{-2} \cdot sr^{-1}$	28000/α	2,74E+05	28000/α		71000/α		
Retinal thermal, weak visual stimulus**	R(λ)	L_{IR}	$W \cdot m^{-2} \cdot sr^{-1}$	545000 0,0017≤ α ≤ 0,011	--					
				6000/α 0,011≤ α ≤ 0,1	--					
IR radiation, eye		E_{IR}	$W \cdot m^{-2}$	100	0,04	570		3200		

* Small source defined as one with α < 0,011 radian. Averaging field of view at 10000 s is 0,1 radian.
** Involves evaluation of non-GLS source

NOTE The action functions: see Table 4.1 and Table 4.2
The applicable aperture diameters: see 4.2.1
The limitations for the angular subtenses: see 4.2.2
The related measurement condition 5.2.3 and the range of acceptance angles: see Table 5.5.

DUT: L1HZ-FCB1100000000 (700mA), Evaluation Distance: 200mm, Angular subtense of the apparent source α: 5 mrad

EN 62471			
Clause	Requirement + Test	Result – Remark	Verdict

Table 6.1	Emission limits for risk groups of continuous wave lamps (based on EU Directive 2006/25/EC)									
Risk	Action spectrum	Symbol	Units	Emission Measurement						
				Exempt		Low risk		Mod risk		
				Limit	Result	Limit	Result	Limit	Result	
Actinic UV	$S_{UV}(\lambda)$	E_s	$W \cdot m^{-2}$	0,001	0,0000	--	--	--	--	
Near UV		E_{UVA}	$W \cdot m^{-2}$	0,33	0,0000	--	--	--	--	
Blue light	B(λ)	L_B	$W \cdot m^{-2} \cdot sr^{-1}$	100	--	10000		4000000		
Blue light, small source	B(λ)	E_B	$W \cdot m^{-2}$	0,01*	1,70	1,0	1,70	400	1,70	
Retinal thermal	R(λ)	L_R	$W \cdot m^{-2} \cdot sr^{-1}$	28000/α	5,89E+05	28000/α		71000/α		
Retinal thermal, weak visual stimulus**	R(λ)	L_{IR}	$W \cdot m^{-2} \cdot sr^{-1}$	545000 0,0017≤ α ≤ 0,011	--					
				6000/α 0,011≤ α ≤ 0,1	--					
IR radiation, eye		E_{IR}	$W \cdot m^{-2}$	100	0,04	570		3200		

* Small source defined as one with α < 0,011 radian. Averaging field of view at 10000 s is 0,1 radian.
** Involves evaluation of non-GLS source

NOTE The action functions: see Table 4.1 and Table 4.2
The applicable aperture diameters: see 4.2.1
The limitations for the angular subtenses: see 4.2.2
The related measurement condition 5.2.3 and the range of acceptance angles: see Table 5.5.

DUT: L1HZ-FCB1100000000 (300mA), Evaluation Distance: 200mm, Angular subtense of the apparent source α: 5 mrad

EN 62471			
Clause	Requirement + Test	Result – Remark	Verdict

Table 6.1	Emission limits for risk groups of continuous wave lamps (based on EU Directive 2006/25/EC)									
Risk	Action spectrum	Symbol	Units	Emission Measurement						
				Exempt		Low risk		Mod risk		
				Limit	Result	Limit	Result	Limit	Result	
Actinic UV	$S_{UV}(\lambda)$	E_s	$W \cdot m^{-2}$	0,001	0,0000	--	--	--	--	
Near UV		E_{UVA}	$W \cdot m^{-2}$	0,33	0,0000	--	--	--	--	
Blue light	B(λ)	L_B	$W \cdot m^{-2} \cdot sr^{-1}$	100	--	10000		4000000		
Blue light, small source	B(λ)	E_B	$W \cdot m^{-2}$	0,01*	0,94	1,0	0,94	400		
Retinal thermal	R(λ)	L_R	$W \cdot m^{-2} \cdot sr^{-1}$	28000/α	2,44E+05	28000/α		71000/α		
Retinal thermal, weak visual stimulus**	R(λ)	L_{IR}	$W \cdot m^{-2} \cdot sr^{-1}$	545000 0,0017≤ α ≤ 0,011	--					
				6000/α 0,011≤ α ≤ 0,1	--					
IR radiation, eye		E_{IR}	$W \cdot m^{-2}$	100	0,03	570		3200		

* Small source defined as one with α < 0,011 radian. Averaging field of view at 10000 s is 0,1 radian.
** Involves evaluation of non-GLS source

NOTE The action functions: see Table 4.1 and Table 4.2
The applicable aperture diameters: see 4.2.1
The limitations for the angular subtenses: see 4.2.2
The related measurement condition 5.2.3 and the range of acceptance angles: see Table 5.5.

----------End----------