Optical Ray file Information for LUXEON® Rebel and LUXEON® Rebel ES

Feb 2, 2022

LUMILEDS

LUXEON Rebel Neutral & Cool White

DS64: LXML-PWC1,LXML-PWN1

Definition of Reference Point

Reference Point – This is the center of rotation of the LED during imaging measurement. The optical focal point is referenced to this point shown below.

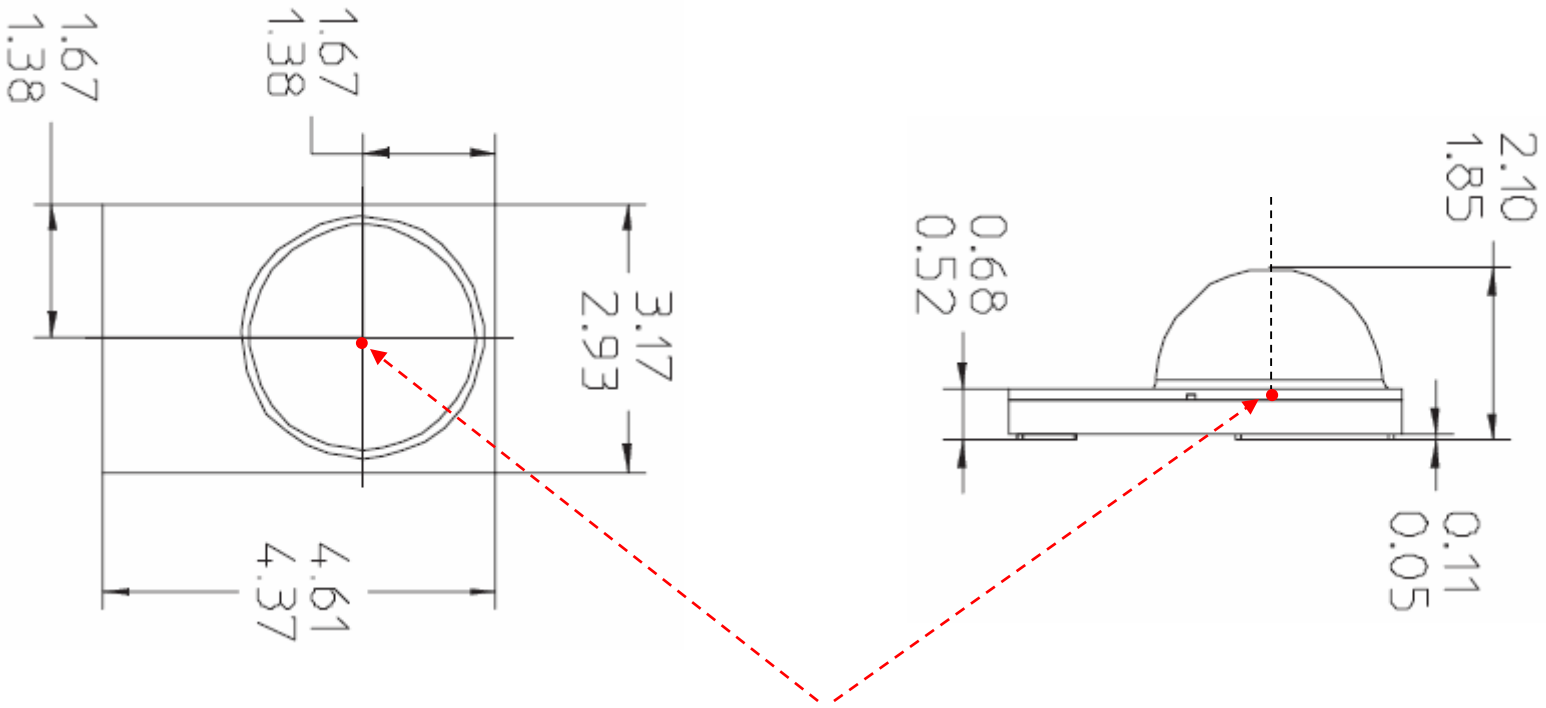

Reference Point with (x, y, z) co-ordinates of (0, 0, 0)

Note: Drawing not to scale. Dimensions are in mm.

Optical Focal Point Summary Result

Source model filename	Rebel White TFFC.rs7
Package	LUXEON Rebel: Cool White & Neutral White
Description of radiation pattern	n/a
Characterization current (mA)	350
Total number of simulation rays	999,993
Optical focal point (x, y, z) in mm*	(0.029, 0.000, 0.063)
Focal distance (F) from base of package (red dash line - see diagram 1)	0.663

* see photo 1 and 2 for definition of x, y and z direction & location of reference point

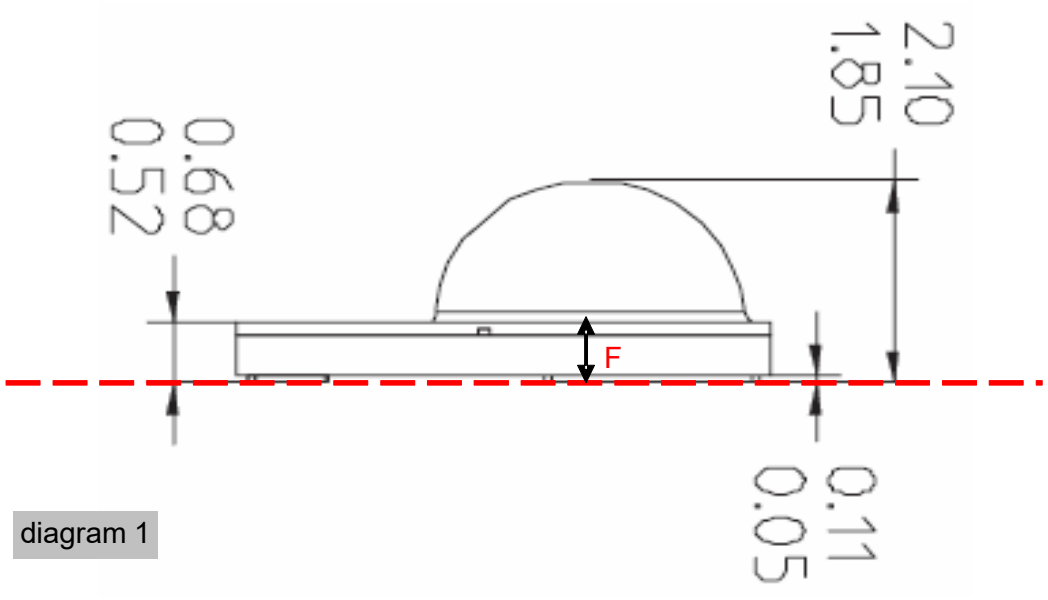

diagram 1

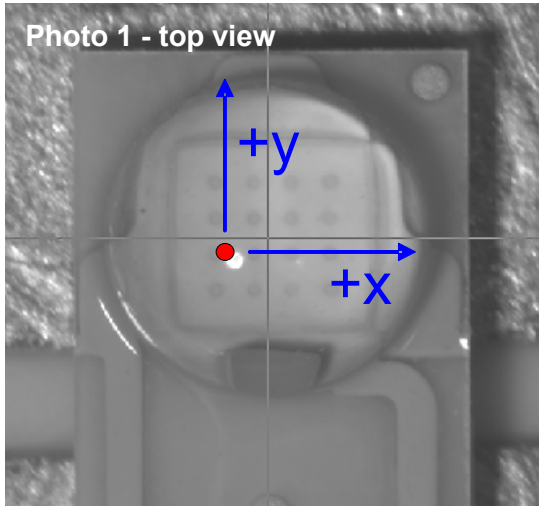

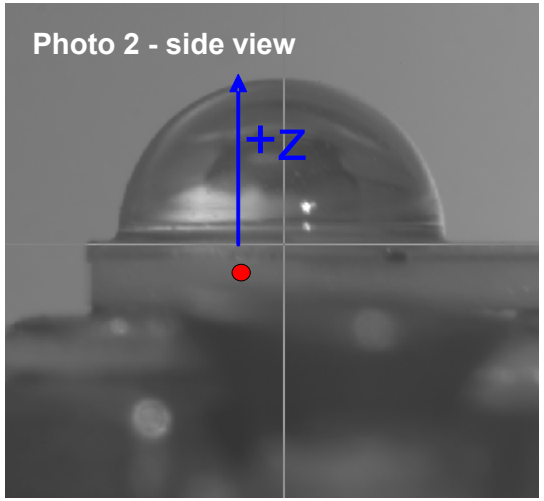

Radiation Pattern – Relative Luminous Intensity

Versus Angle on *x-z* Plane

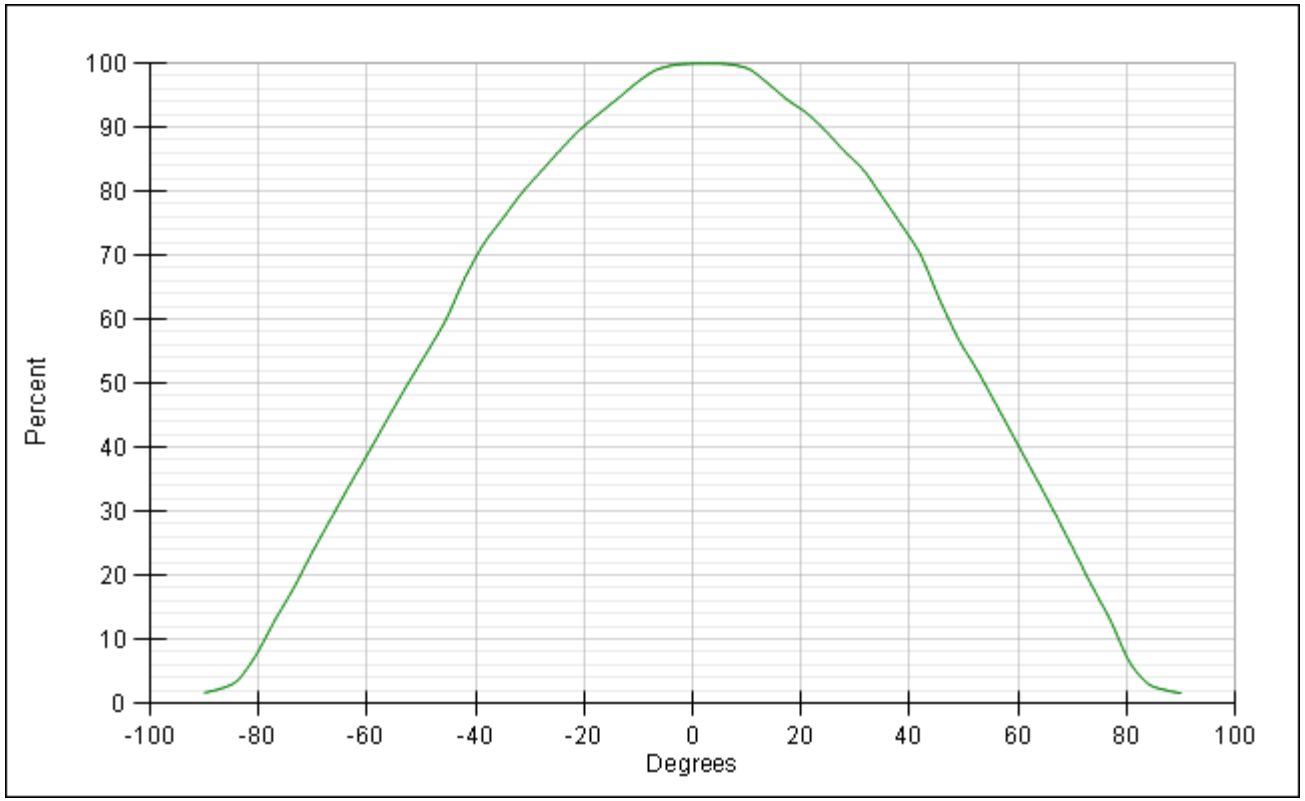

LUXEON Rebel ES Neutral & Cool White (Typical CRI 65/70, 700mA)

DS61: LXML-PWC2 & LXML-PWN2

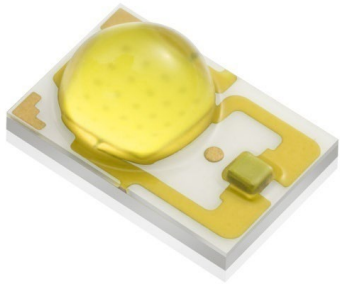

Location of Reference Point

Note: Drawing not to scale. Dimensions are in mm.

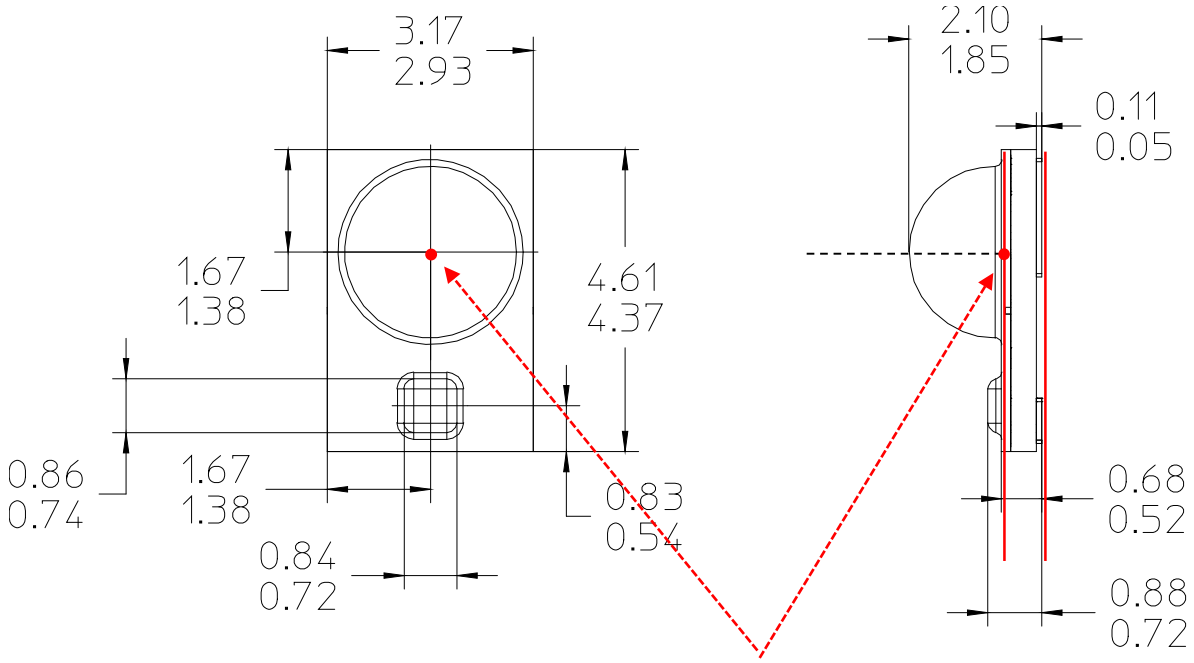

Reference Point with (x, y, z) co-ordinates of (0, 0, 0)

- **x = 0, y = 0 in center of dome**
- **z = 0 at top of silicone surface**

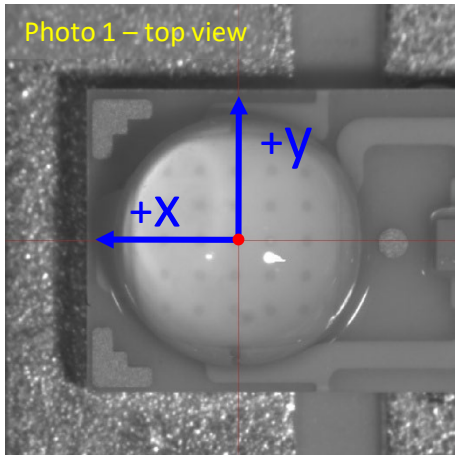

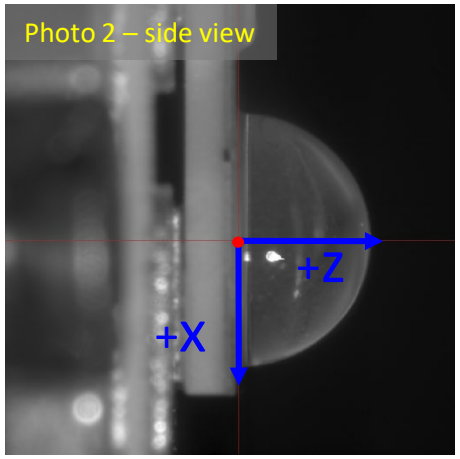

White 700mA

Radiation Pattern – Relative Luminous Intensity versus Angle on x-y plane (left) and x-z plane (right)

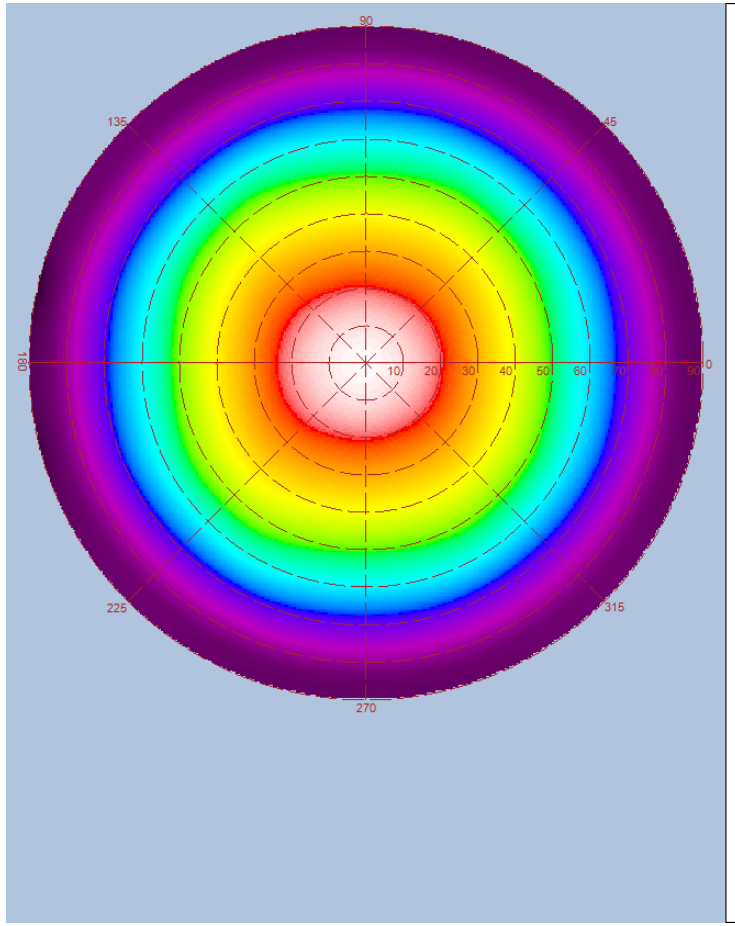

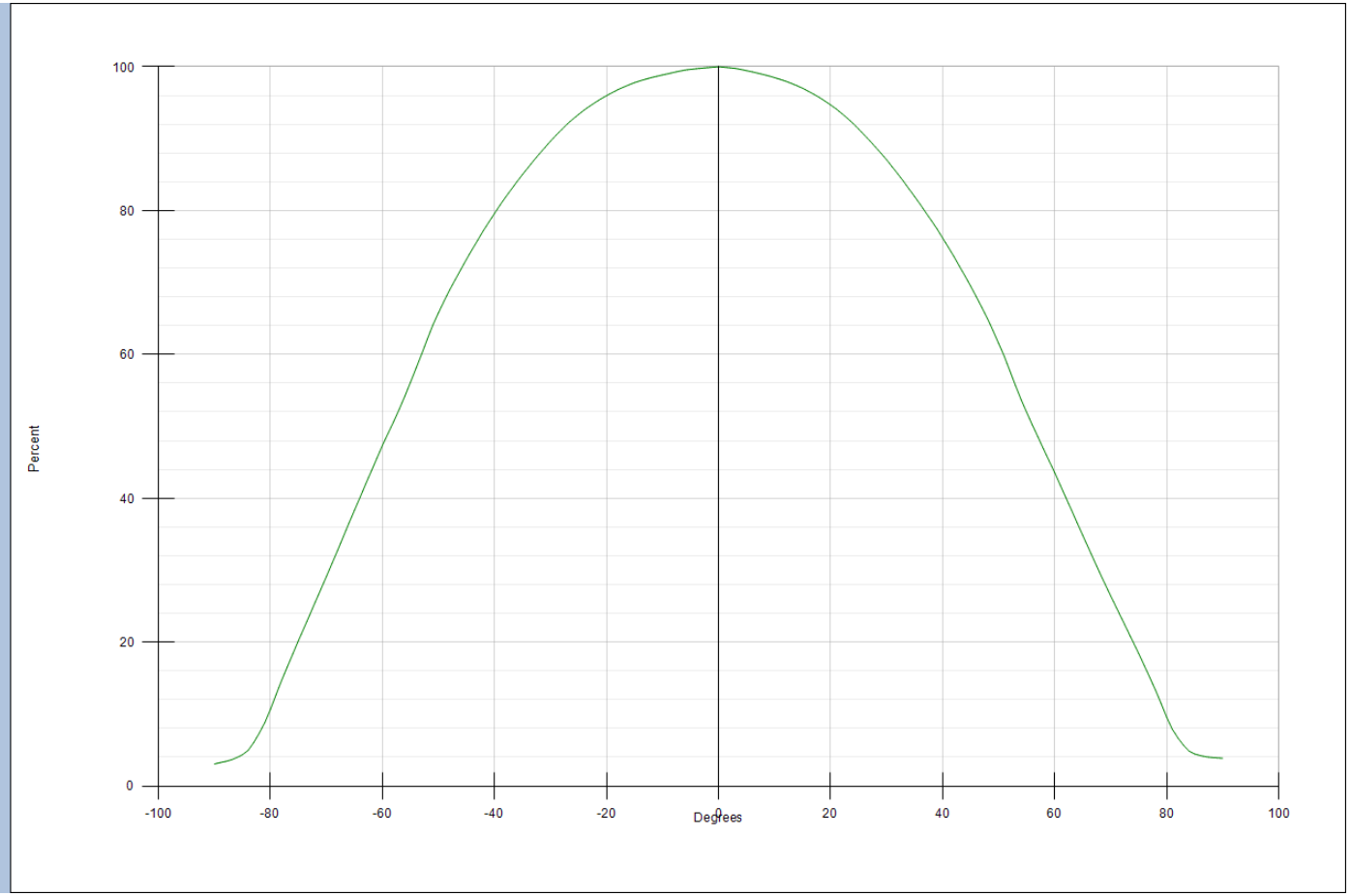

LUXEON Rebel Royal Blue, Blue, Cyan & Green

DS68: LXML-PR01, LXML-PB01, LXML-PE01, LXML-PM01

Definition of Reference Point

Reference Point – This is the center of rotation of the LED during imaging measurement. The optical focal point is referenced to this point shown below.

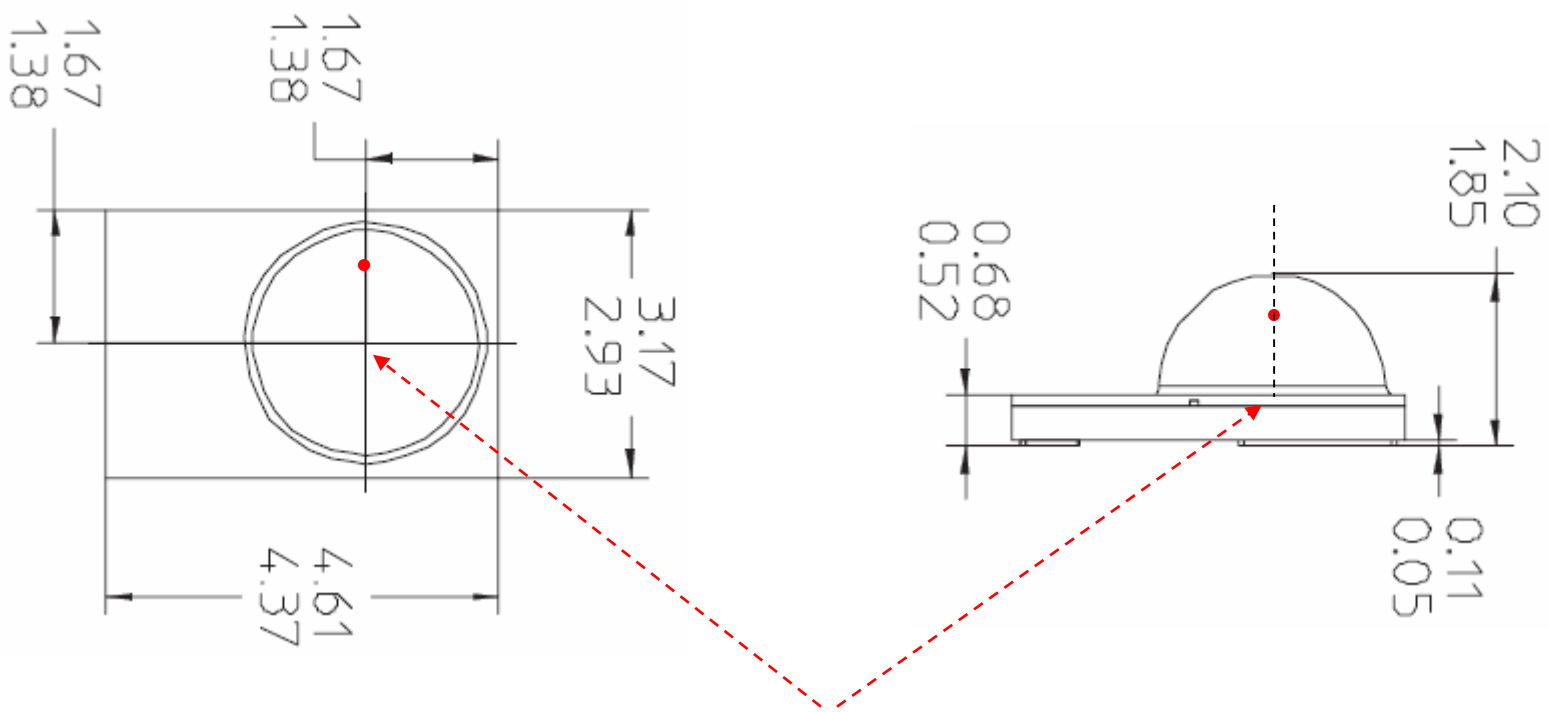

Reference Point with (x, y, z) co-ordinates of (0, 0, 0)

Note: Drawing not to scale. Dimensions are in mm.

Optical Focal Point Summary Result

Source model filename	Rebel InGaN TFFC.rs7
Package	LUXEON Rebel: InGaN Royal Blue, Blue, Cyan & Green
Description of radiation pattern	n/a
Characterization current (mA)	350
Total number of simulation rays	1,000,108
Optical focal point (x, y, z) in mm *	(0.045, -0.019, 0.089)
Focal distance (F) from base of package (red dash line - see diagram 1)	0.689

* see photo 1 and 2 for definiton of x, y and z direction & location of reference point

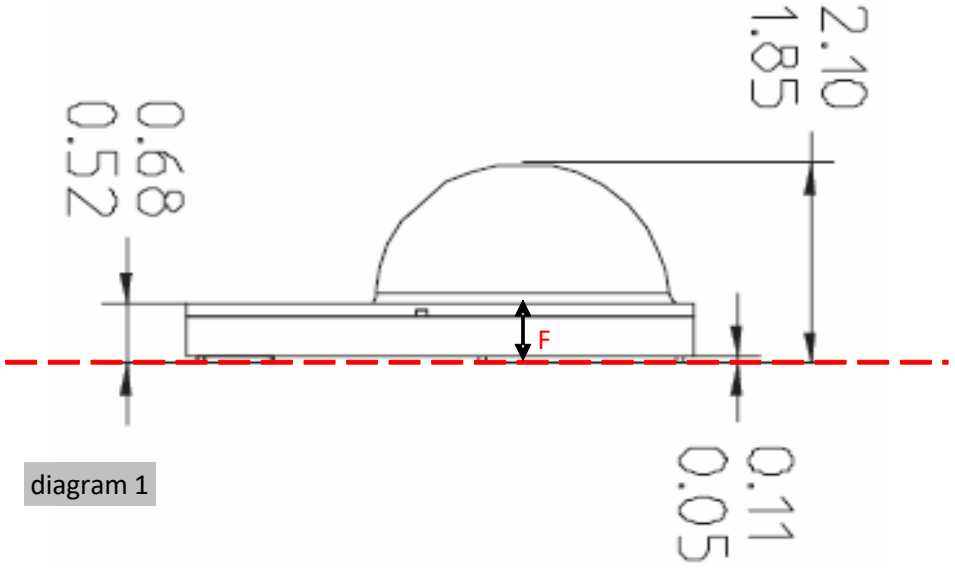

diagram 1

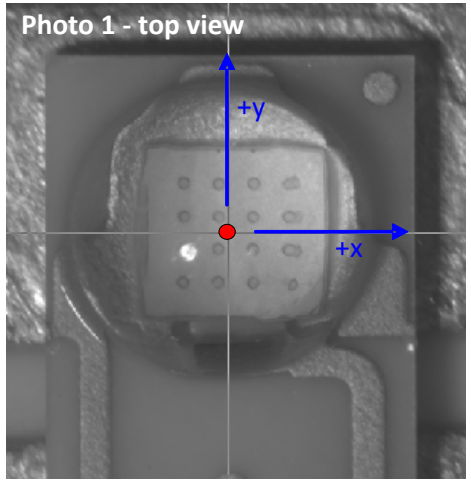

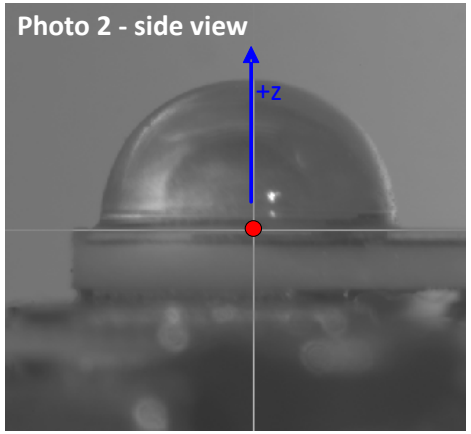

Radiation Pattern – Relative Luminous Intensity Versus Angle on *x-z* Plane

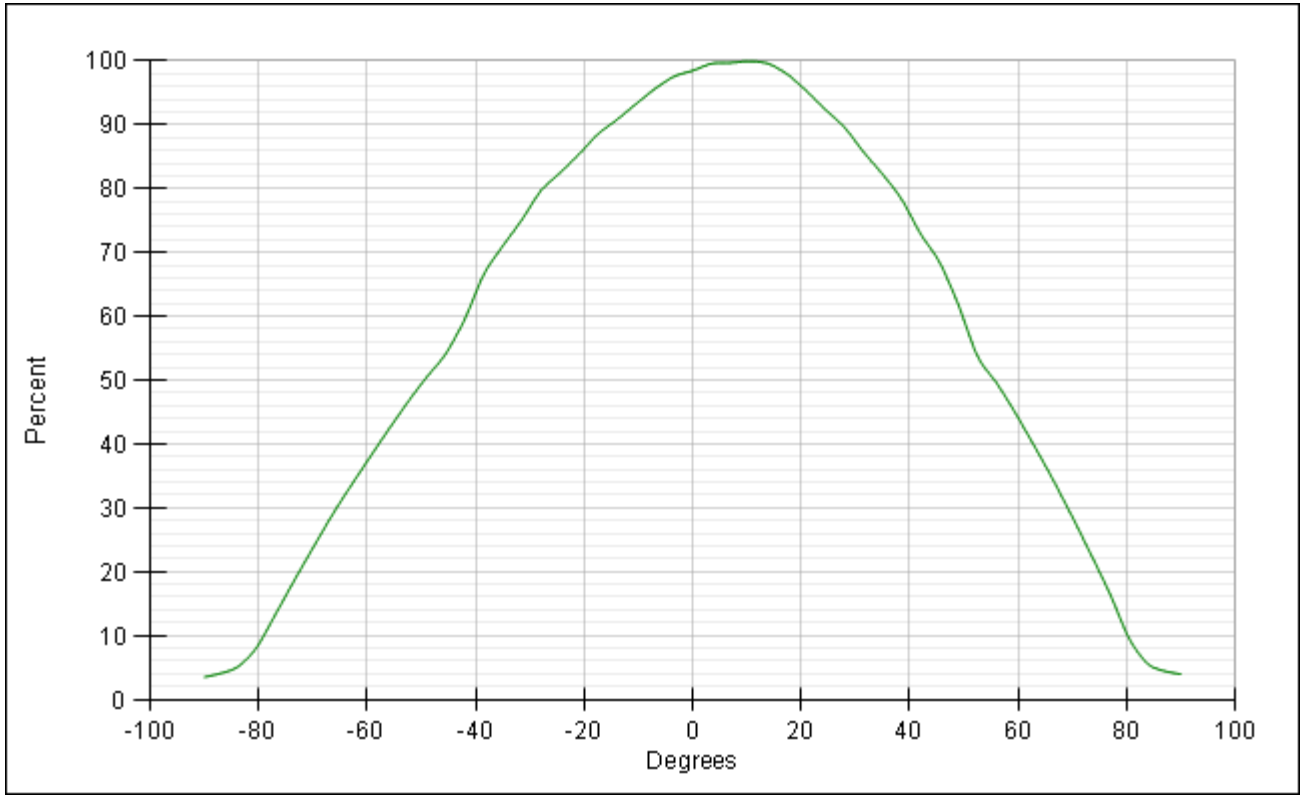

LUXEON Rebel Phosphor Converted (PC) Amber

DS68: LXM2-PL01

Definition of Reference Point

Reference Point – This is the center of rotation of the LED during imaging measurement. The optical focal point is referenced to this point shown below.

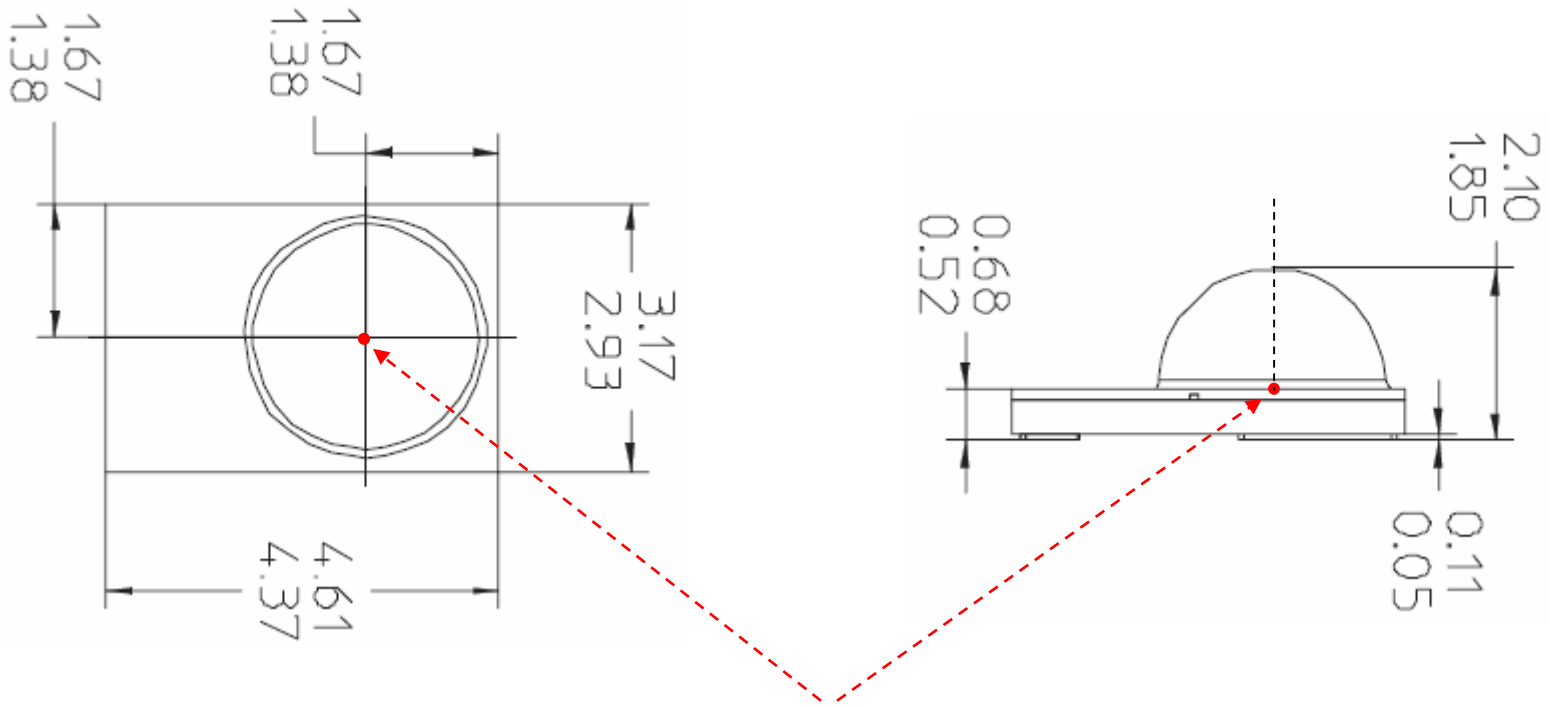

Reference Point with (x, y, z) co-ordinates of (0, 0, 0)

Note: Drawing not to scale. Dimensions are in mm.

Focal Point Summary Result

Source model filename	LXM2-PL01_H4D2_04-23-2009 .RS8
Package	LUXEON Rebel Phosphor Converted (PC) Amber
Description of radiation pattern	n/a
Characterization current (mA)	350
Total number of simulation rays	999,966
Optical focal point (x, y, z) in mm *	(-0.011, -0.045, 0.207)
Focal distance (F) from base of package (red dash line - see diagram 1)	0.807

* see photo 1 and 2 for definition of x, y and z direction & location of reference point

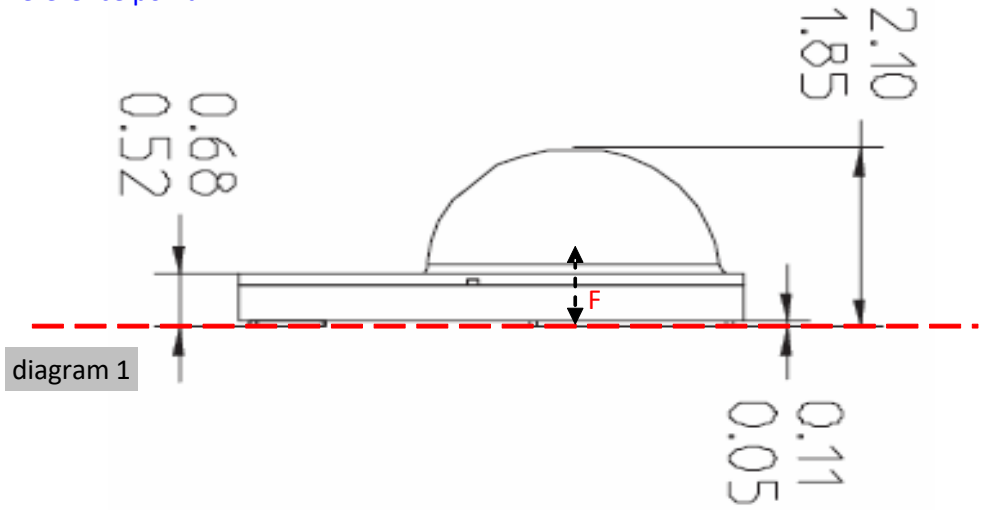

diagram 1

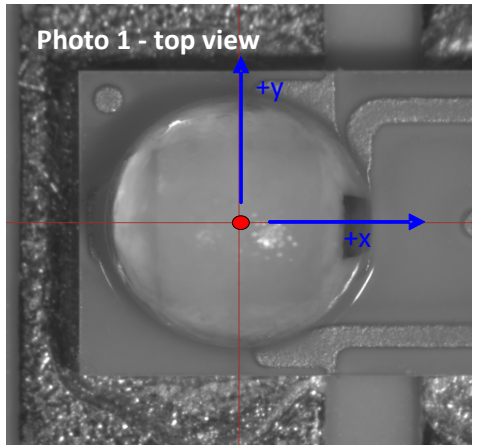

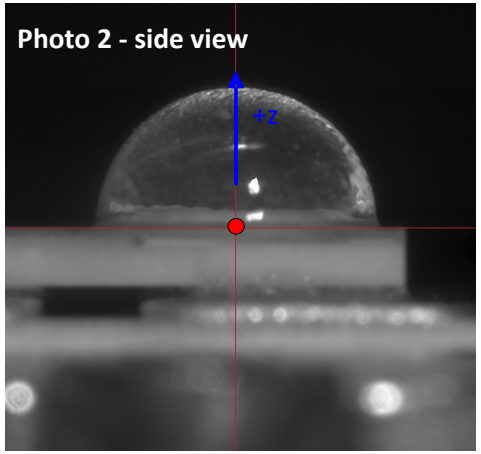

Radiation Pattern – Relative Luminous Intensity Versus Angle on *x-z* Plane

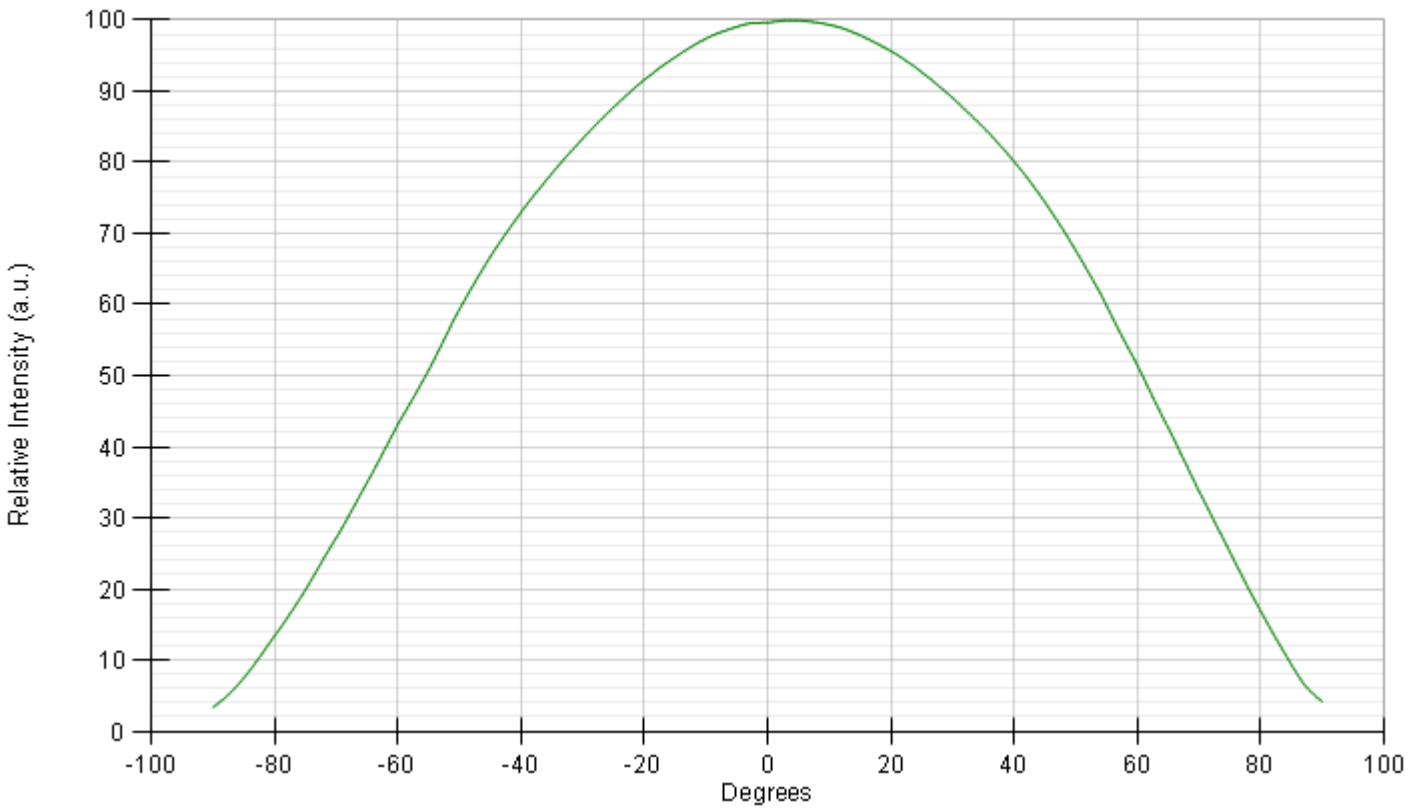

LUXEON Rebel ES Royal Blue & Blue (700mA)

DS68: LXML-PR02, LXML-PB02

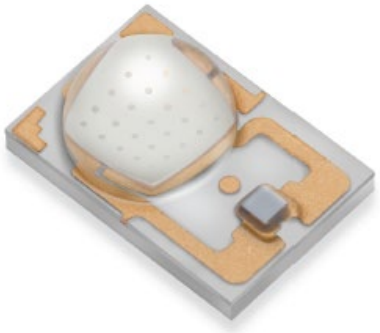

Location of Reference Point

Note: Drawing not to scale. Dimensions are in mm.

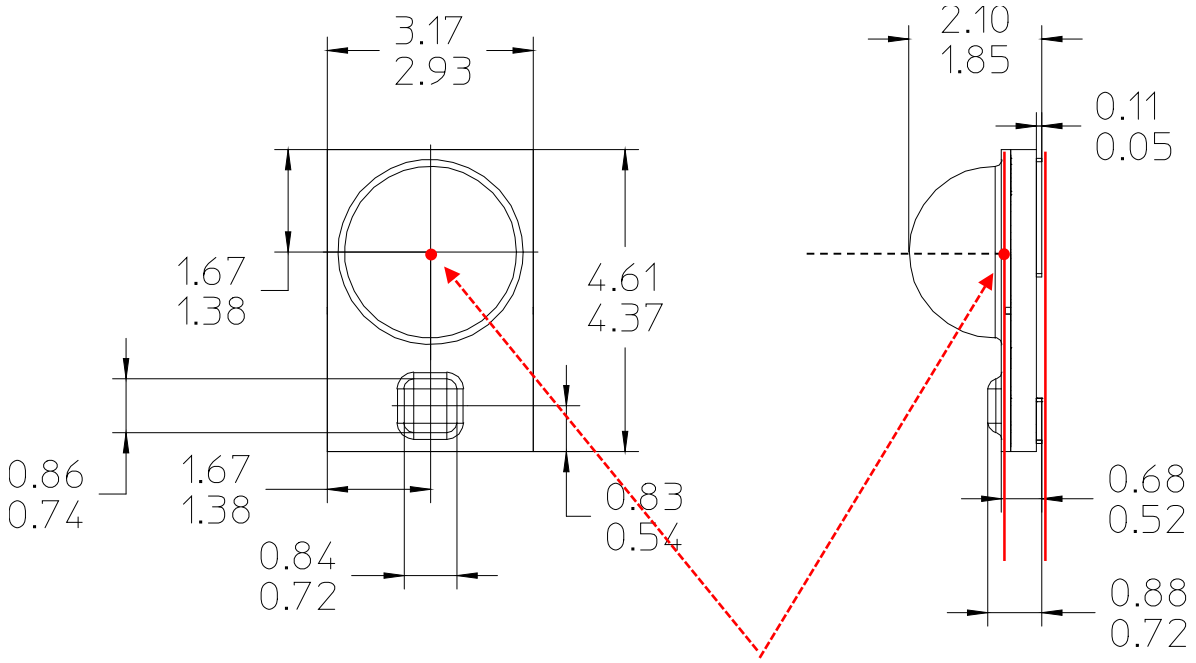

Reference Point with (x, y, z) co-ordinates of (0, 0, 0)

- **x = 0, y = 0 in center of dome**
- **z = 0 at top of silicone surface**

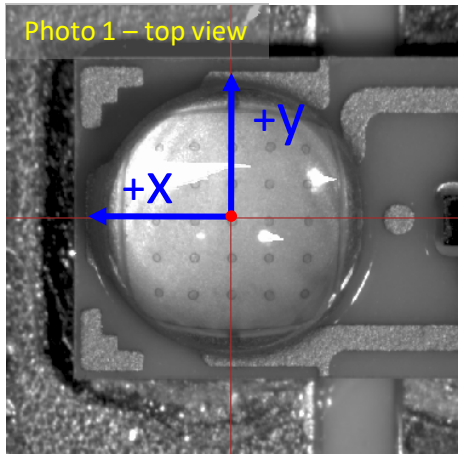

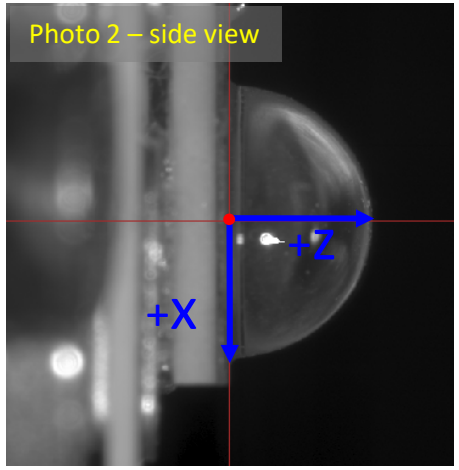

Radiation Pattern – Relative Luminous Intensity versus Angle on x-y plane (left) and x-z plane (right)

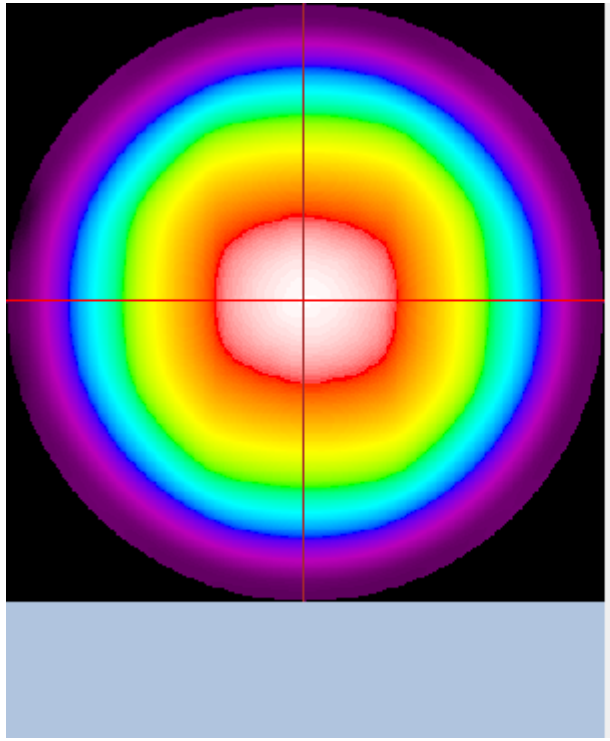

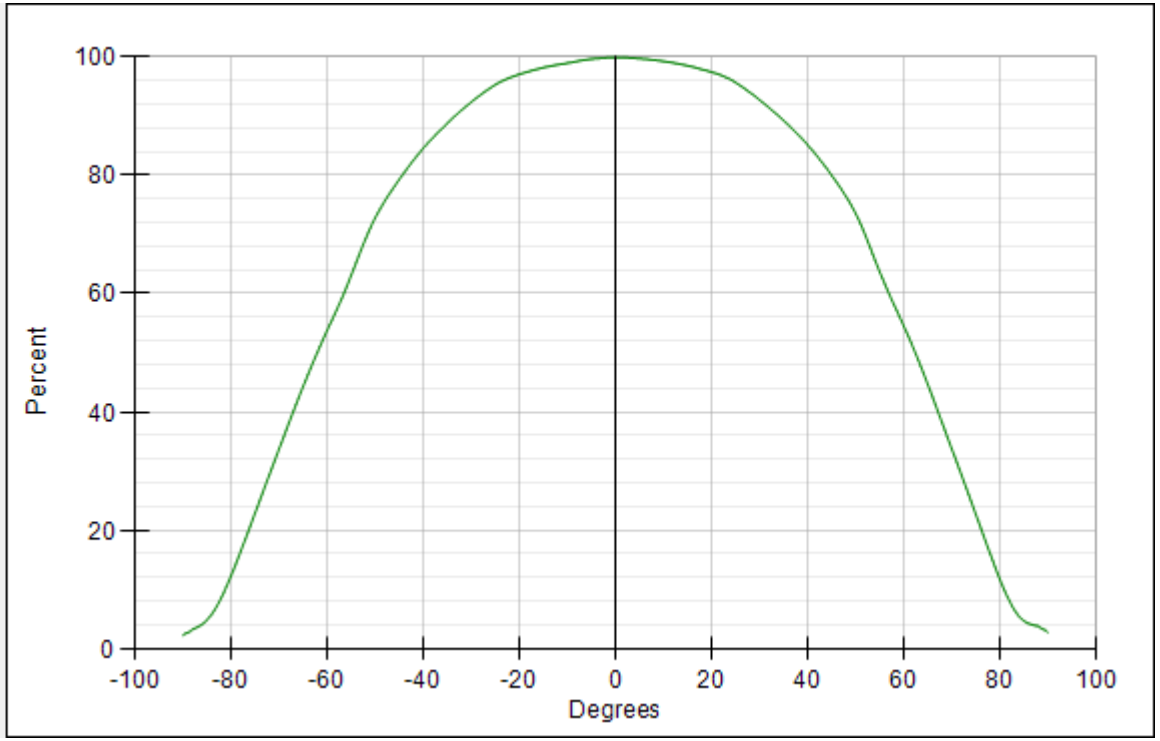

LUXEON Rebel ES Lime

DS68: LXML-PX02

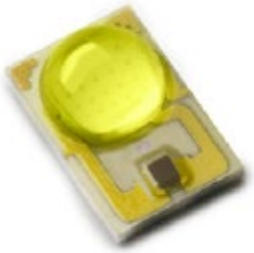

Location of Reference Point

Note: Drawing not to scale. Dimensions are in mm.

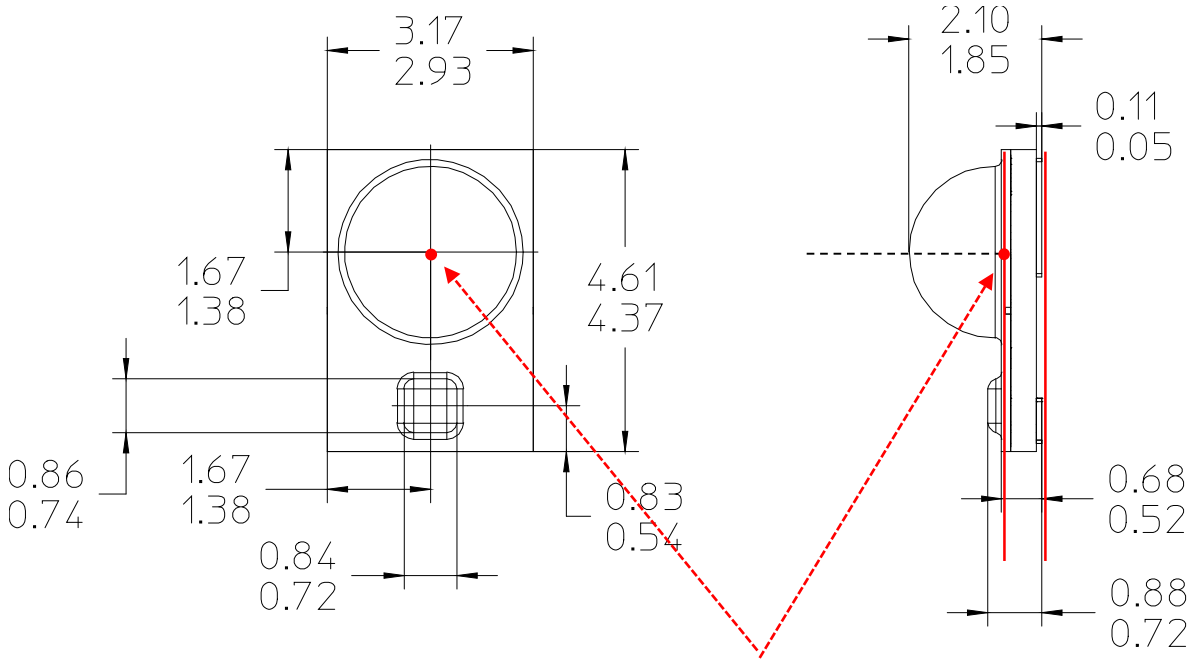

Reference Point with (x, y, z) co-ordinates of (0, 0, 0)

- **x = 0, y = 0 in center of dome**
- **z = 0 at top of silicone surface**

Photo 1 – top view

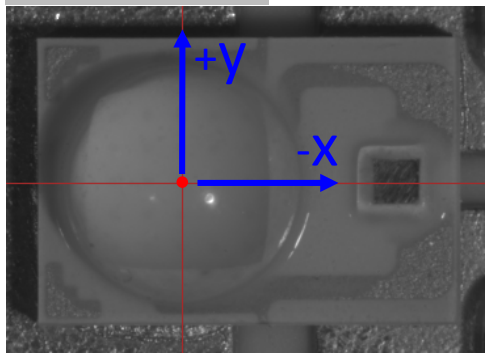

Photo 2 – side view

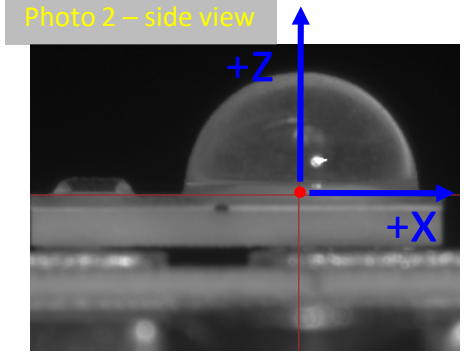

Radiation Pattern – Relative Luminous Intensity Versus Angle on *x-z* Plane

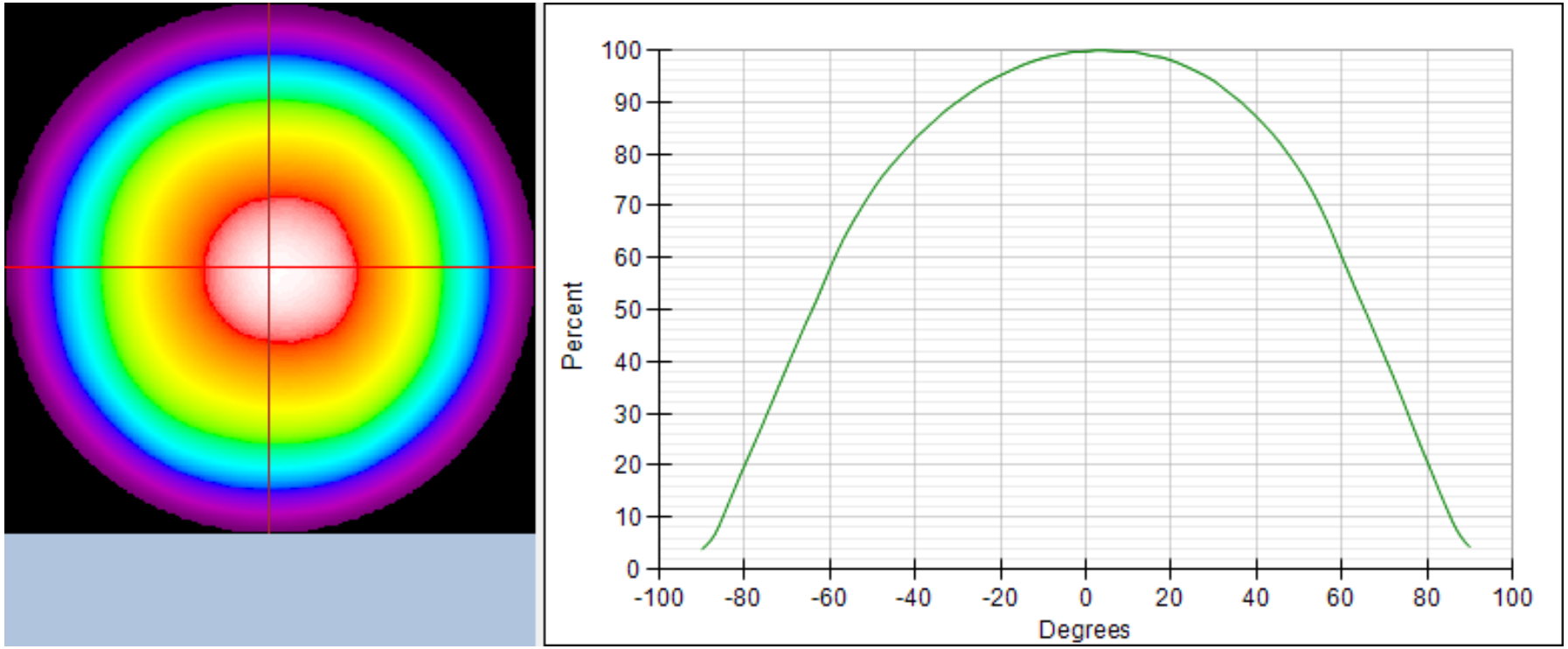

LUXEON Rebel AlInGaP Amber, Red-Orange & Red (Typical Vf 2.9V)

DS68: LXML-PL01, LXML-PH01, LXML-PD01, LXMA-PL01, LXMA-PH01

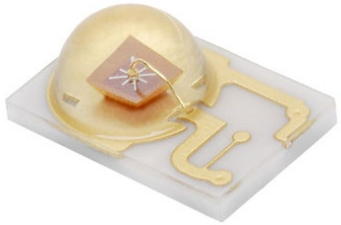

Definition of Reference Point

Reference Point – This is the center of rotation of the LED during imaging measurement. The optical focal point is referenced to this point shown below.

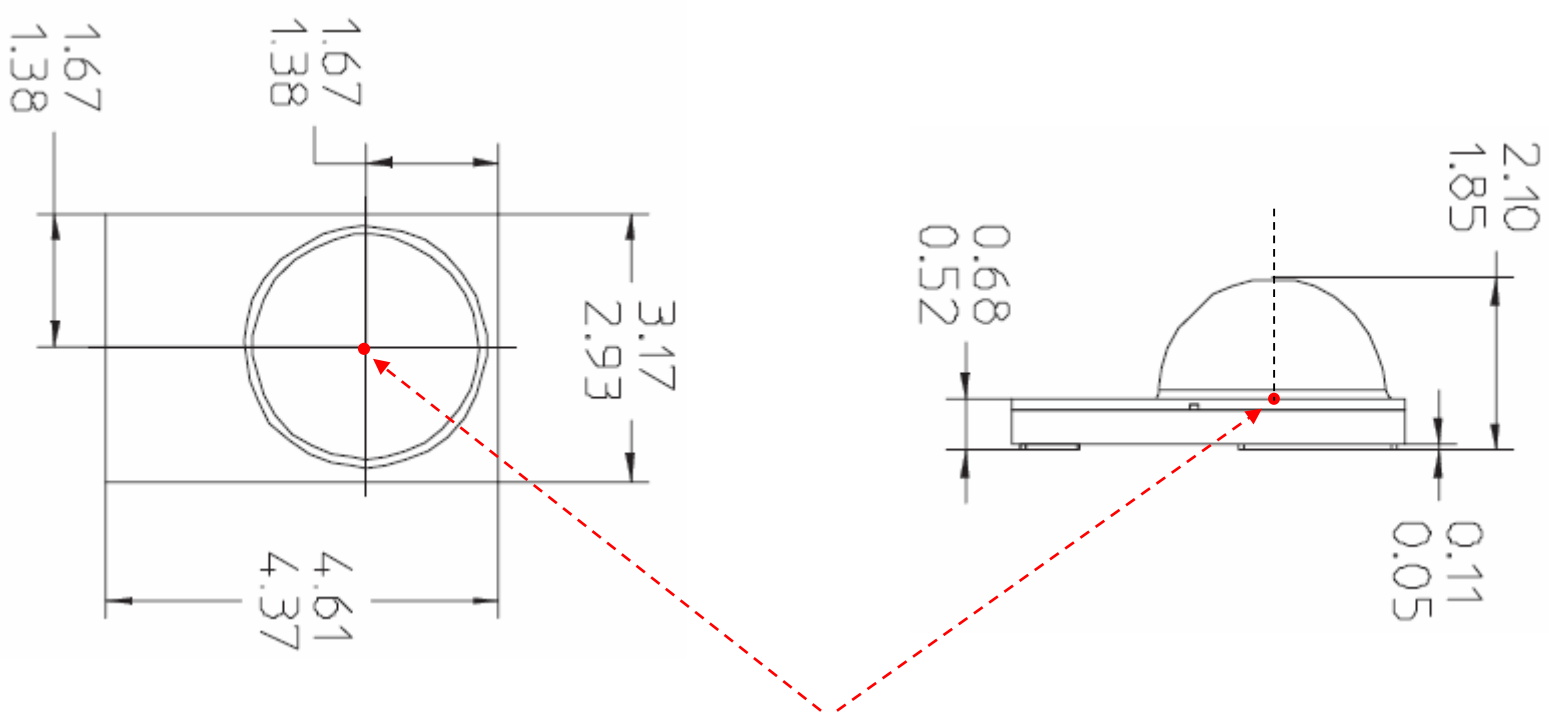

Reference Point with (x, y, z) co-ordinates of (0, 0, 0)

Note: Drawing not to scale. Dimensions are in mm.

Optical Focal Point Summary Result

Source model filename	Rebel-AlInGaP-Typical_final.rs7
Package	LUXEON Rebel: AlInGaP Amber, Red-Orange & Red
Description of radiation pattern	n/a
Characterization current (mA)	350
Total number of simulation rays	999,911
Optical focal point (x, y, z) in mm*	(0.047, -0.040, -0.018)
Focal distance (F) from base of package (red dash line, - see diagram 1)	0.582

* see photo 1 and 2 for definition of x, y and z direction & location of reference point

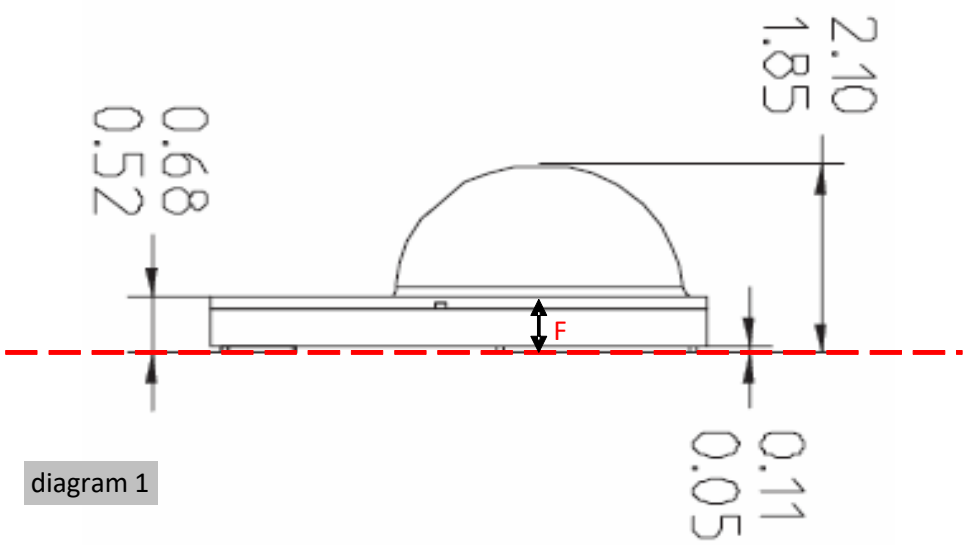

diagram 1

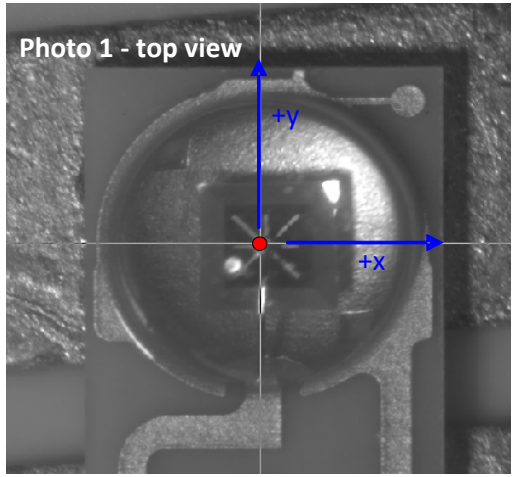

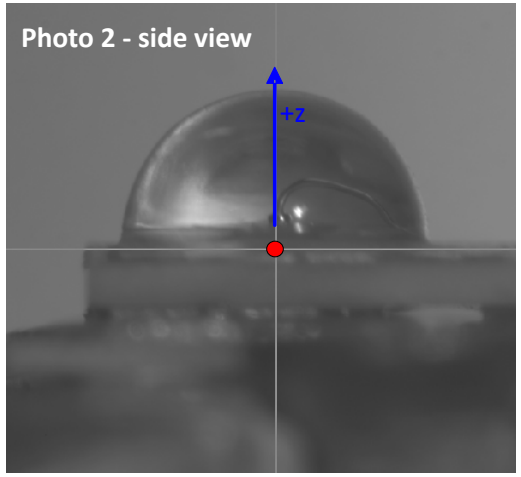

Radiation Pattern – Relative Luminous Intensity Versus Angle on *x-z* Plane

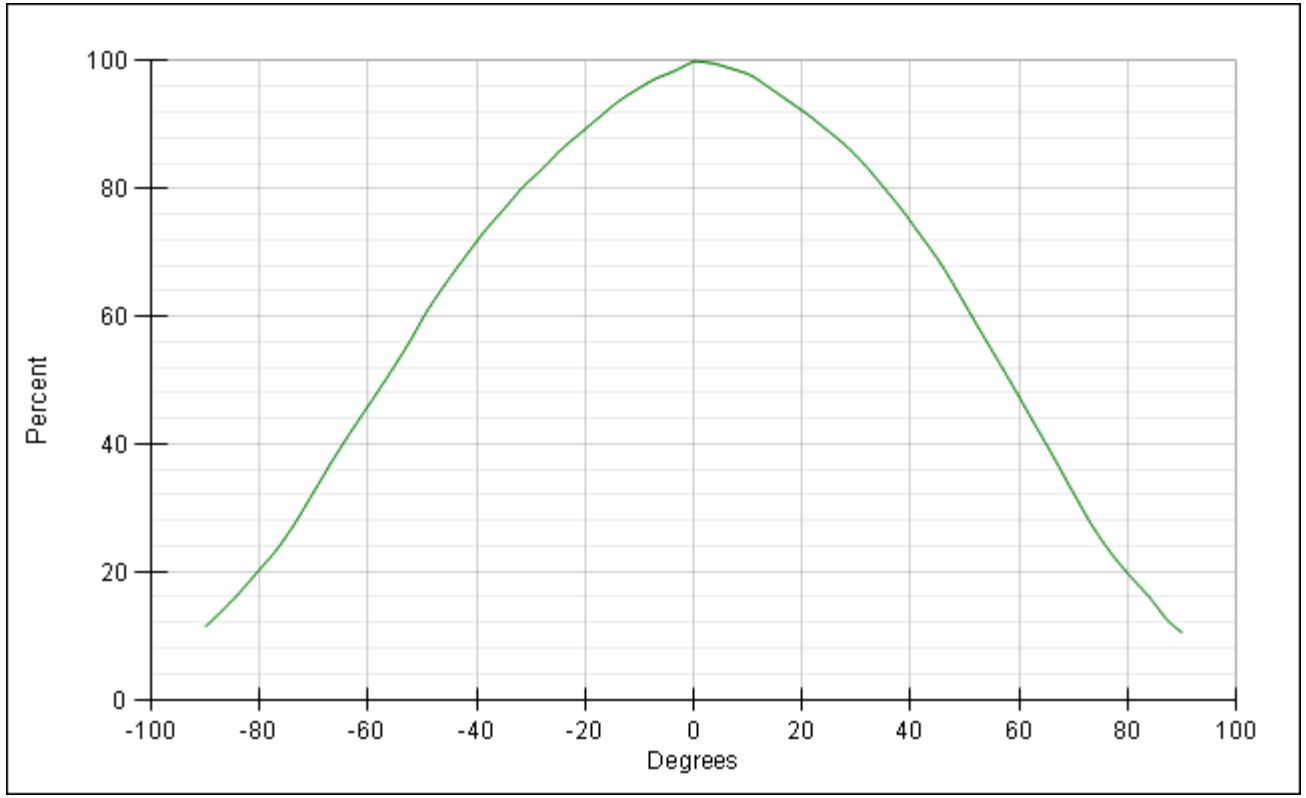

LUXEON Rebel AlInGaP Red-Orange, Red & Deep Red (Typical Vf 2.1V)

DS68: LXM2-PH01, LXM2-PD01, LXM3-PD01

Location of Reference Point

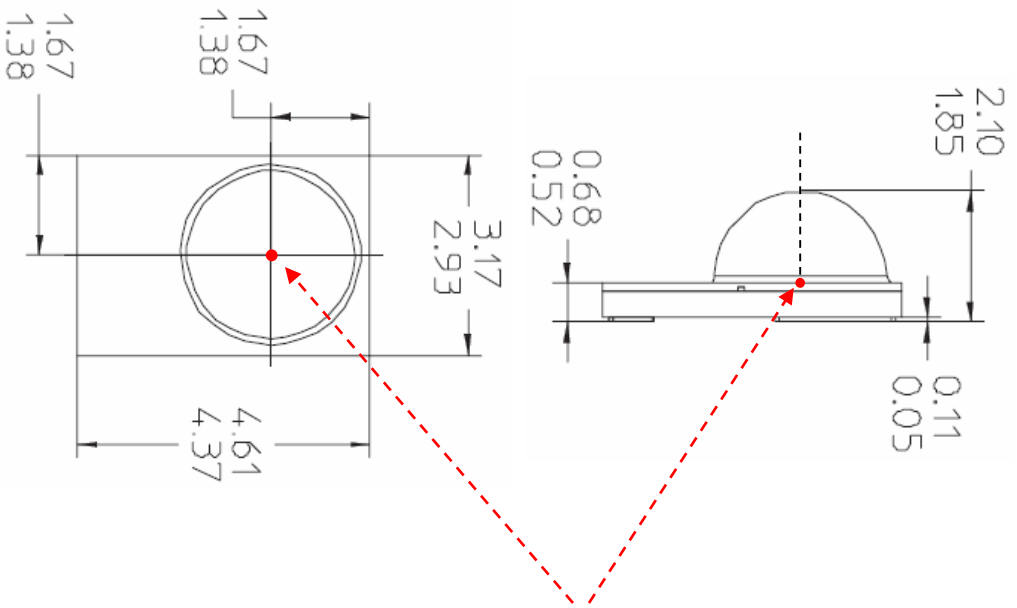

Reference Point with (x, y, z) co-ordinates of (0, 0, 0)

x = 0, y = 0 in center of dome
z = 0 at top of silicone surface

Note: Drawing not to scale. Dimensions are in mm.

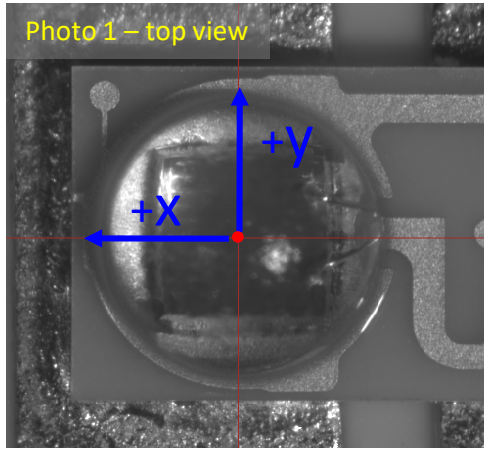

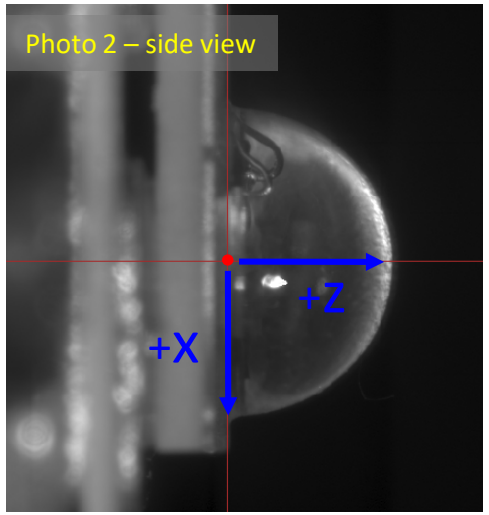

Radiation Pattern – Relative Luminous Intensity Versus Angle on *x-z* Plane

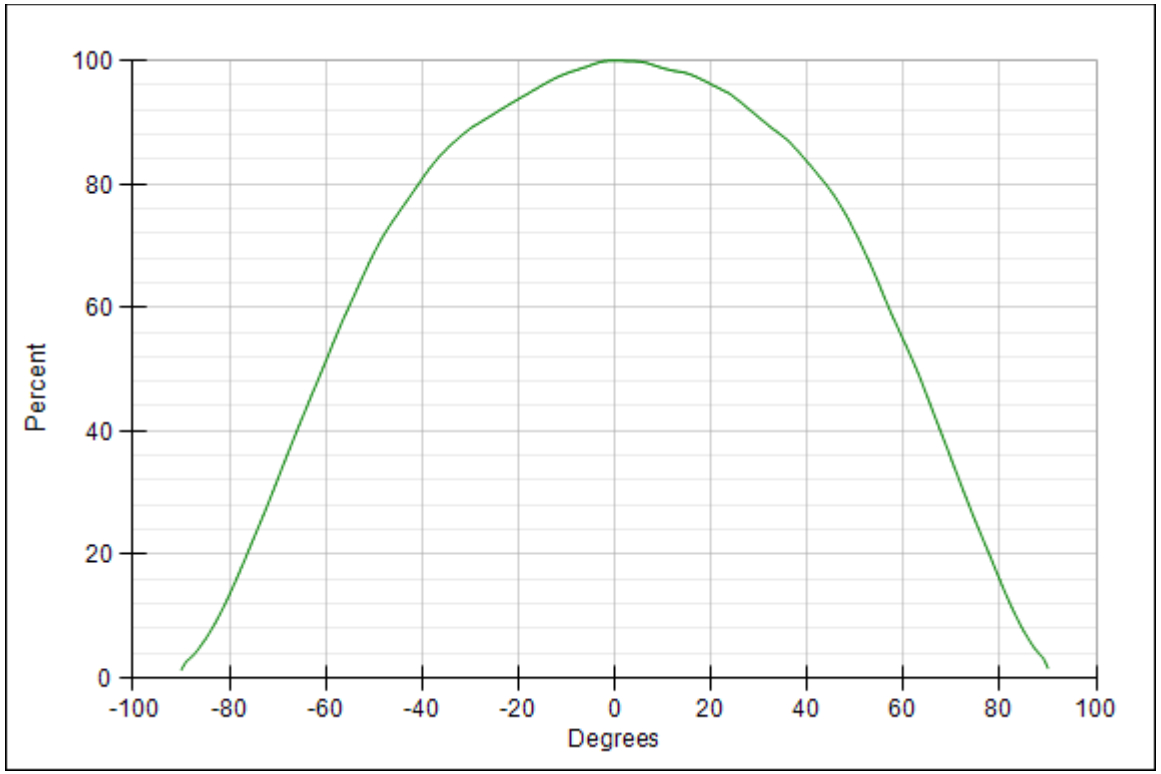

Neither Lumileds Holding B.V. nor its affiliates shall be liable for any kind of loss of data or any other damages, direct, indirect or consequential, resulting from the use of the provided information and data. Although Lumileds Holding B.V. and/or its affiliates have attempted to provide the most accurate information and data, the materials and services information and data are provided “as is,” and neither Lumileds Holding B.V. nor its affiliates warrants or guarantees the contents and correctness of the provided information and data. Lumileds Holding B.V. and its affiliates reserve the right to make changes without notice. You as user agree to this disclaimer and user agreement with the use of the provided materials, information and data. A listing of Lumileds product/patent coverage may be accessed at lumileds.com/patents.